Keeping the Customer First

Tungaloy Catalogue TE0707-E2

2007

Cutting Tools

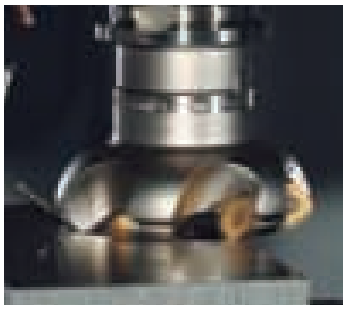

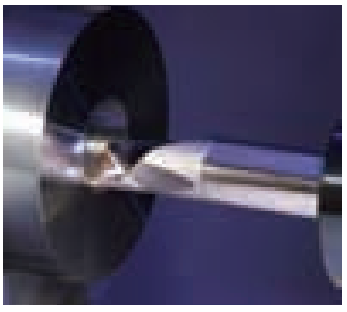

www.tungaloy-eu.com

TAC Parting & Grooving Tools

Selection Guides

- My-T Grooving System 198
- My-T Applications 199
- My-T Grade selection 200
- My-T Inserts 201

Specifications (My-T)

- Parting and External operations 203
  - CGWS (for 2 - corner) 203
  - CGSS (for 1 - corner) 204
- Parting and External grooving (JCGSS) 204
- Parting and External operations 205
- Internal Operations 206
- Parting 206
- Facing 207
- Application detail 211
- Cautionary point in use 213

Specifications (Others)

- Parting CTH / CTS / SCTH-type .. 214
- Parting and Grooving CTW-type 217
- External Grooving SGT-type 218
- Grooving and Facing GX-type 219
- Internal Grooving SNG / CNG-type 221
- External Grooving (Flex-Tool) 224

4

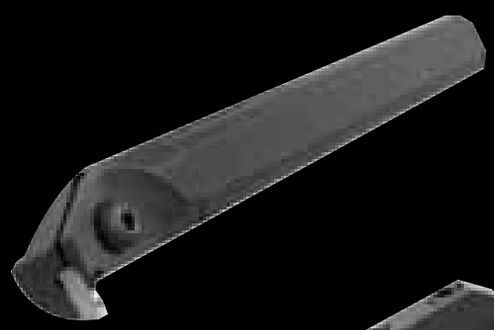

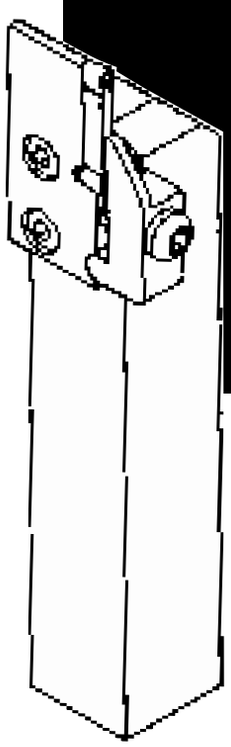

Concept

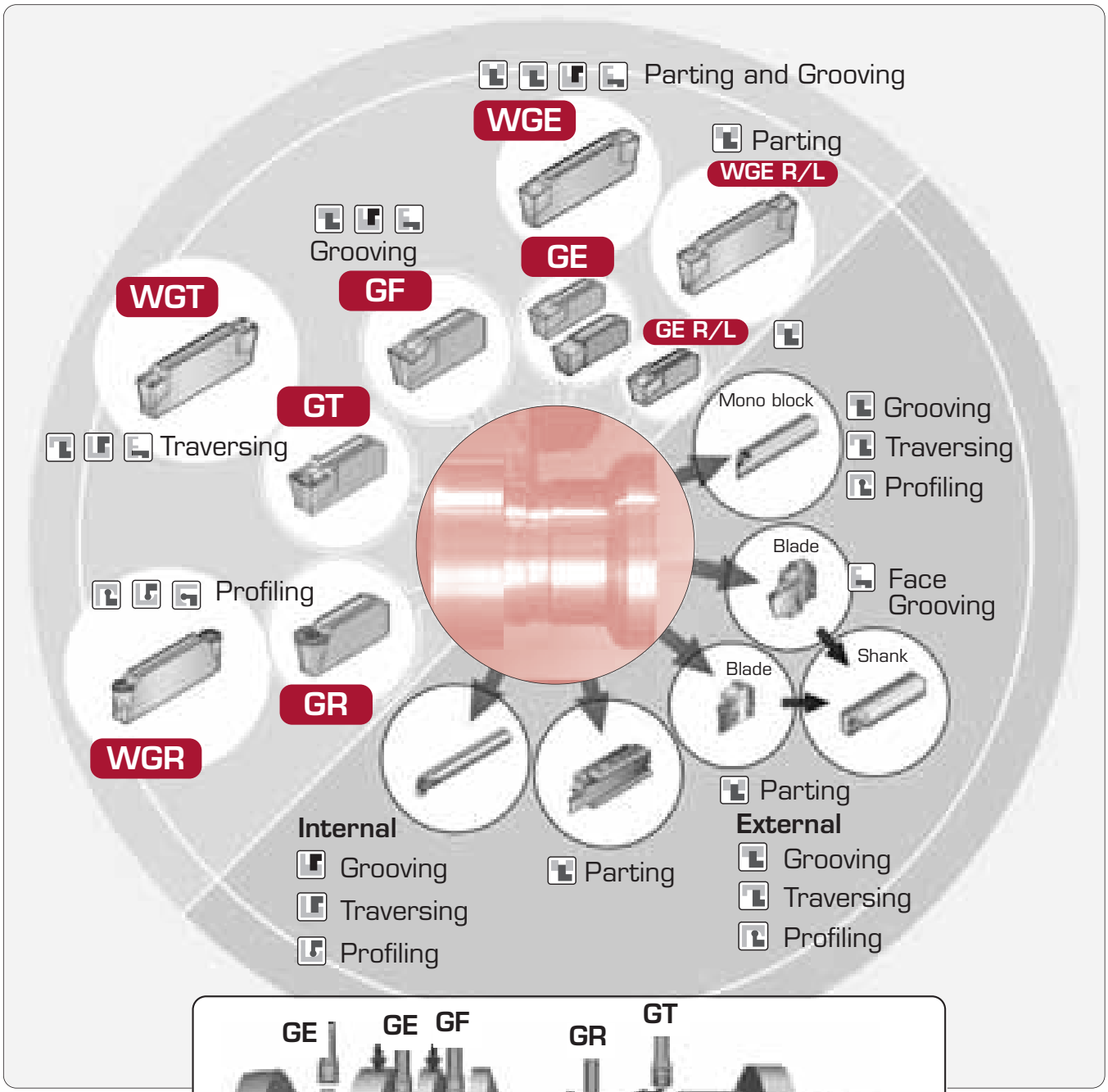
Parting and Grooving
WGE
Parting
WGE R/L
Grooving
GF
GE
WGT
GE R/L
GT
Traversing
Mono block
Grooving
Traversing
Profiling
Blade
Face Grooving
Profiling
Shank
Blade
GR
WGR
Parting
Internal
Grooving
Traversing
Profiling
Parting
External
Grooving
Traversing
Profiling

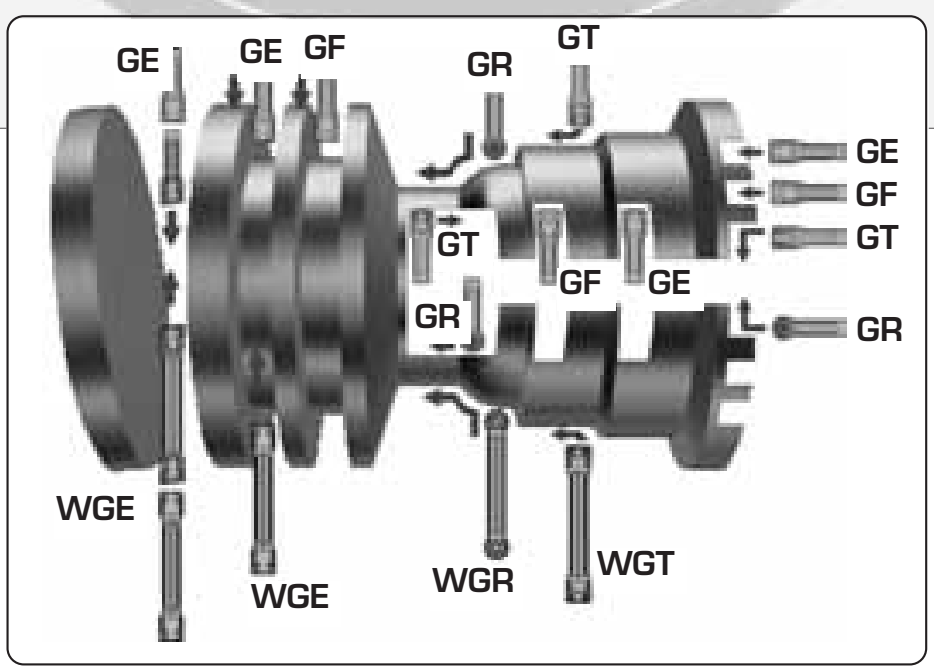
GE
GE
GF
GR
GT
GE
GF
GT
GT
GF
GE
GR
GR
WGE
WGE
WGR
WGT

Applications

Applications		Parting	Grooving			Traversing			Profiling		
			External	Internal	Facing	External	Internal	Facing	External	Internal	Facing
Inserts type	Grooving width (mm)										
WGE* *	2	●	●								
GE* *	3										
	4	●		●							
	5										
WGE* *R/L	3										
GE* *R/L	4	●									
	5										
GE* *-AL	2	●	●								
	3	●		●							
	4										
GF* *	3										
	4			●							
	5										
WGT* *	3										
GT* *	4						●				
	5										
WGR* *	R1.5										
GR* *	R2.0									●	
	R2.5										

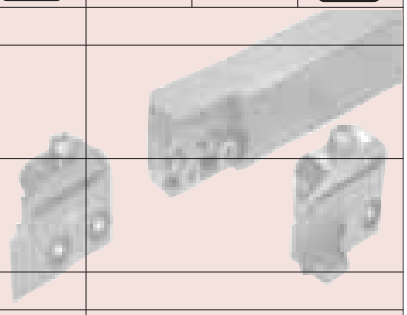

Grade

T9025 (P20; MT-CVD)

P K

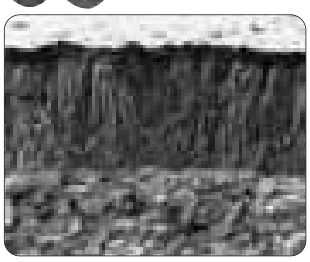

- Wear resistant grade
- High speed cutting
- For steels and cast irons
- Best suited for grooving and external grooving

GH730 (P30 - P40; PVD)

P M

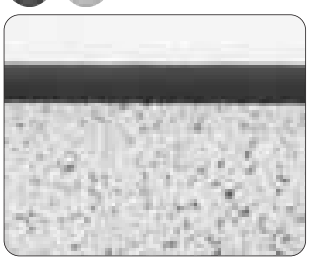

- Break and wear resistant grade
- Low and medium cutting speed
- For steels and stainless steels
- Best suited for parting

NS530 (Cermet)

P K

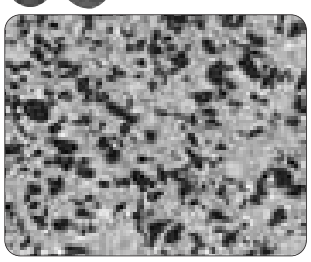

- Extremely wear resistant grade
- High speed cutting
- For steels and cast irons
- Extremely smooth surface quality
- Best suited for grooving and traversing

KS05F (Carbide)

N

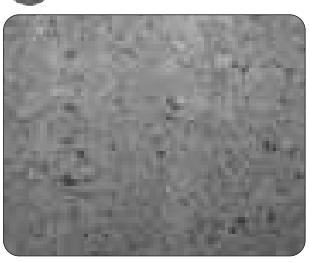

- For aluminium alloys and non-ferrous metals
- Micro grain carbide
- For extremely sharp cutting edges

Grade selection

Work materials		Cutting speed Vc (m/min) 0 – 100 – 200 – 300
P	• Low carbon steels Ck10, St42 etc.	T9025 GH730 NS530
P	• Alloy steels C45, 42CrMo4 etc.	T9025 GH730 NS530
P	• High carbon steels 40NiCrMo6 etc.	T9025 GH730 NS530
M	• Stainless steels X5CrNi18-10 etc.	T9025 GH730
K	• Cast irons GG25, GGG40 etc.	T9025 GH730
N	• Aluminium alloys • Non-ferrous metals	KS05F

Standard cutting parameter

Parting and grooving with WGE/GE, GF type

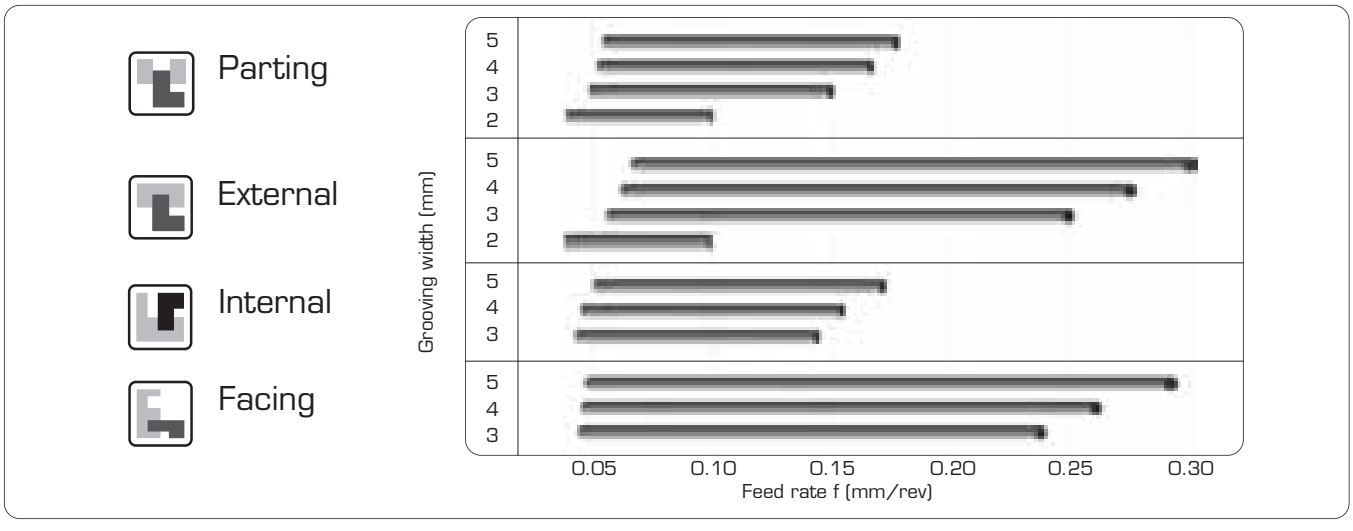

Traversing with WGT/GT type

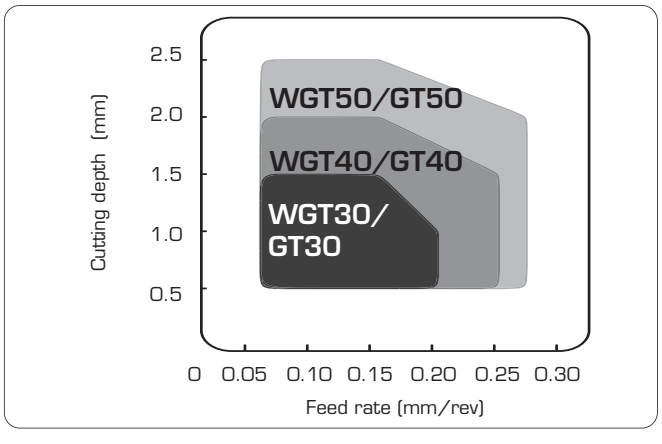

Profiling with WGR/GR type

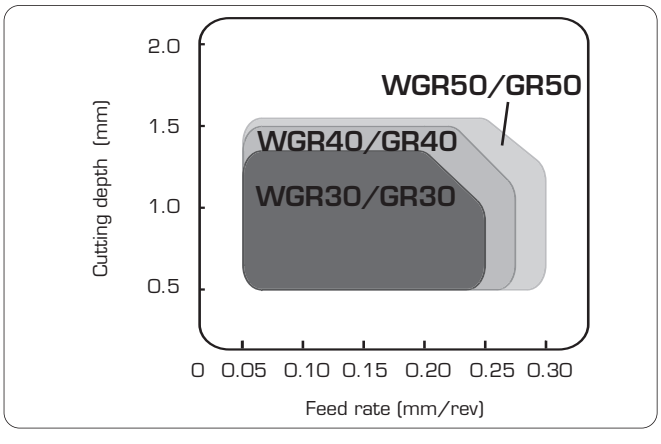

Inserts

Parting and Grooving

WGE 2-corner type

• Standard stock in Europe

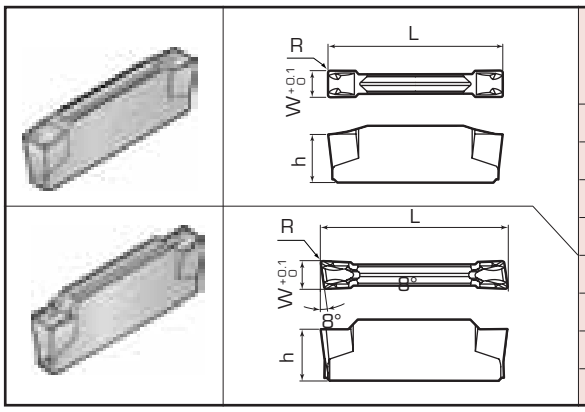

Cat. No.	Dimensions (mm)				Grade	
	W	L	h	R	Coated	
					T9025	GH730
WGE20	2	20	4.7	0.2	●	●
WGE30	3	20	5.5		●	●
WGE40	4	25	5.7		●	●
WGE50	5	25	5.9		●	●
WGE20R/L	2	20	4.7		●	●
WGE30R/L	3	20	5.5		●	●
WGE40R/L	4	25	5.7		●	●
WGE50R/L	5	25	5.9		●	●

WGE**R/L : only for parting
Right hand (R) shown

GE 1-corner type

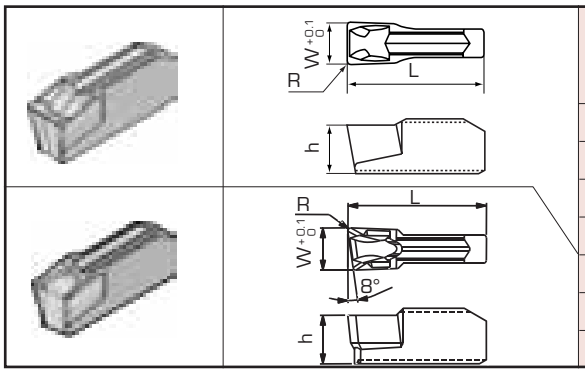

Cat. No.	Dimensions (mm)				Grade		
	W	L	h	R	Coated		Cermet
					T9025	GH730	NS530
GE20	2	10	3.5	0.2	●	●	●
GE30	3	10	3.5		●	●	●
GE40	4	10	4.0		●	●	●
GE50	5	12	4.5		●	●	●
GE30R/L	3	10	3.5		●	●	
GE40R/L	4	10	4.0		●	●	
GE50R/L	5	12	4.5		●	●	

GE**R/L : only for parting
Right hand (R) shown

Traversing

WGT 2-corner type

• Standard stock in Europe

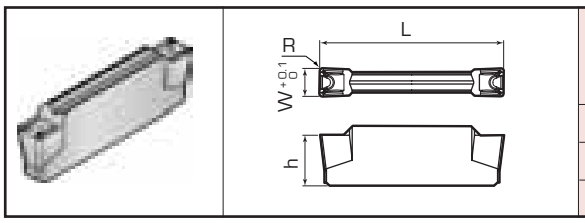

Cat. No.	Dimensions (mm)				Grade	
	W	L	h	R	Coated	
					T9025	GH730
WGT30	3	20	5.5	0.4	●	●
WGT40	4	25	5.7		●	●
WGT50	5	25	5.9		●	●

GT 1-corner type

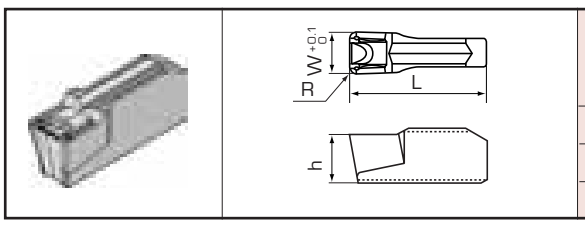

Cat. No.	Dimensions (mm)				Grade		
	W	L	h	R	Coated		Cermet
					T9025	GH730	NS530
GT30	3	10	3.5	0.4	●	●	●
GT40	4	10	4.0		●	●	●
GT50	5	12	4.5		●	●	●

Profiling

WGR 2-corner type

● Standard stock in Europe

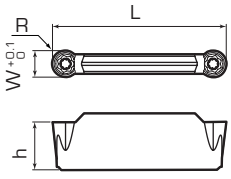

Cat. No.	Dimensions (mm)				Grade	
					Coated	
	W	L	h	R	T9025	GH730
WGR30	3	20	5.5	1.5	●	●
WGR40	4	25	5.7	2.0	●	●
WGR50	5	25	5.9	2.5	●	●

GR 1-corner type

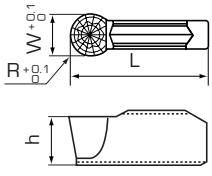

Cat. No.	Dimensions (mm)				Grade		
					Coated		Cermet
	W	L	h	R	T9025	GH730	NS530
GR30	3	10	3.5	1.5	●	●	●
GR40	4	10	4.0	2.0	●	●	●
GR50	5	12	4.5	2.5	●	●	●

Grooving and Facing

GF

● Standard stock in Europe

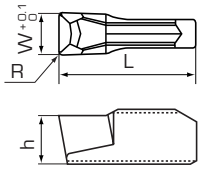

Cat. No.	Dimensions (mm)				Grade		
					Coated		Cermet
	W	L	h	R	T9025	GH730	NS530
GF30	3	10	3.5	0.2	●	●	●
GF40	4	10	4.0		●	●	●
GF50	5	12	4.5		●	●	●

Parting and Grooving - Aluminium

GE-AL

❍ Standard stock in Japan

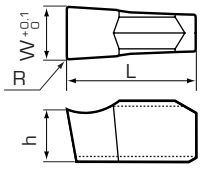

Cat. No.	Dimensions (mm)				Grade
					Carbide
	W	L	h	R	KS05F
GE20-AL	2	10	3.5	0.2	❍
GE30-AL	3	10	3.5		❍
GE40-AL	4	10	4.0		❍

Feed f (mm/rev) = 0.03 - 0.10

Toolholder

Parting and External operations

CGWS R/L

● Standard stock in Europe

Monoblock for 2-corner inserts

Fig. 1

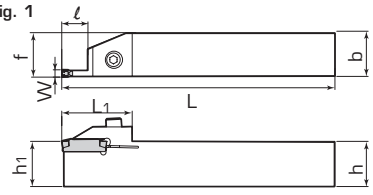

Fig. 2

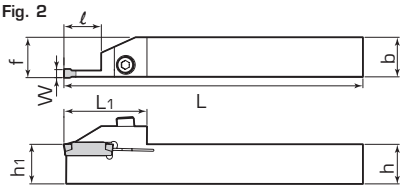

Grooving width W (mm)	Grooving depth (mm)	Cat. No.	Stock R	Stock L	Insert	Dimensions (mm) b	h	h1	f	L	L1	ℓ	Screw	Wrench	Fig.
2	15	CGWSR/L1616-W20-L	●	●	WGE20	16	16	16	16.2	125	37	16.5	CHHM5-18	P-4	2
		CGWSR/L2020-W20-L	●	●	WGE20R/L	20	20	20	20.2	150					
		CGWSR/L2525-W20-L	●	●		25	25	25	25.2						
3	12	CGWSR/L1616-W30	●	●	WG*30	16	16	16	16.4	125	34	13.5			1
		CGWSR/L2020-W30	●	●	WGE30R/L	20	20	20	20.4	150					
		CGWSR/L2525-W30	●	●		25	25	25	25.4						
	16.5	CGWSR/L1616-W30-L	●	●		16	16	16	16.4	125	37	20.5			2
		CGWSR/L2020-W30-L	●	●		20	20	20	20.4	150					
		CGWSR/L2525-W30-L	●	●		25	25	25	25.4						
4	13	CGWSR/L2020-W40	●	●	WG*40	20	20	20	20.4	150	39	14.5			1
		CGWSR/L2525-W40	●	●	WGE40R/L	25	25	25	25.4						
	21	CGWSR/L2020-W40-L	●	●		20	20	20	20.4		42	25.5			2
		CGWSR/L2525-W40-L	●	●		25	25	25	25.4						
5	13	CGWSR/L2020-W50	●	●	WG*50	20	20	20	20.4	150	39	14.5			1
		CGWSR/L2525-W50	●	●	WGE50R/L	25	25	25	25.4						
	21	CGWSR/L2020-W50-L	●	●		20	20	20	20.4		42	25.5			2
		CGWSR/L2525-W50-L	●	●		25	25	25	25.4						

WGE**R/L: only for parting
Inserts: P. 201 ~ 202

CGSS R/L

● Standard stock in Europe

Monoblock for 1-corner inserts

Fig. 1

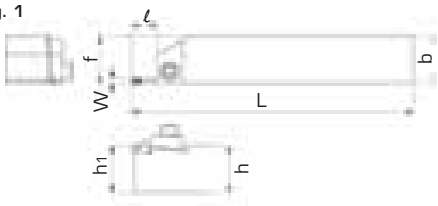

Fig. 2

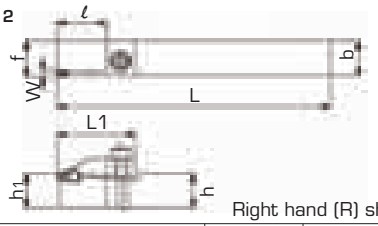

Right hand (R) shown

Grooving width W (mm)	Grooving depth (mm)	Cat. No.	Stock R	Stock L	Insert	Dimensions (mm) b	h	h1	f	L	L1	ℓ	Screw	Wrench	Fig.
2	16	CGSSR/L1616-20	●	●	GE20	16	16	16	16.2	125	-	17.0	CHHM5-18	P-4	1
		CGSSR/L2020-20	●	●		20	20	20	20.2	150					
		CGSSR/L2525-20	●	●		25	25	25	25.2						
3	12	CGSSR/L1616-30	●	●	G*30 GE30R/L	16	16	16	16.5	125	-	13.5			
		CGSSR/L2020-30	●	●		20	20	20	20.5	150					
		CGSSR/L2525-30	●	●		25	25	25	25.5						
	22	CGSSR/L1616-30D	●	●		16	16	16	16.5	125	36.2	23.0			2
		CGSSR/L2020-30D	●	●		20	20	20	20.5	150					
		CGSSR/L2525-30D	●	●		25	25	25	25.5						
4	12	CGSSR/L1616-40			G*40 GE40R/L	16	16	16	16.6	125	-	13.5			1
		CGSSR/L2020-40	●	●		20	20	20	20.6	150					
		CGSSR/L2525-40	●	●		25	25	25	25.6						
	25	CGSSR/L1616-40D				16	16	16	16.6	125	39.5	26.0			2
		CGSSR/L2020-40D	●	●		20	20	20	20.6	150					
		CGSSR/L2525-40D	●	●		25	25	25	25.6						
5	12	CGSSR/L1616-50			G*50 GE50R/L	16	16	16	16.7	125	-	13.5			1
		CGSSR/L2020-50	●	●		20	20	20	20.7	150					
		CGSSR/L2525-50	●	●		25	25	25	25.7						
	25	CGSSR/L1616-50D				16	16	16	16.7	125	39.5	26.0			2
		CGSSR/L2020-50D	●	●		20	20	20	20.7	150					
		CGSSR/L2525-50D	●	●		25	25	25	25.7						

GE**R/L: only for parting
Inserts: P. 201 ~ 202

Parting and External grooving

JCGSS R/L

● Standard stock in Europe

J-type holder

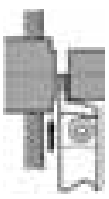

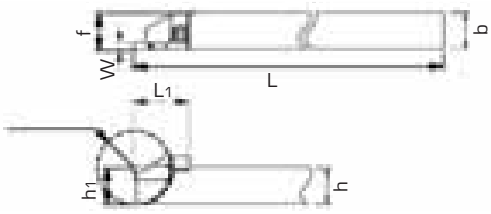

Right hand (R) shown

Grooving width W (mm)	Max. Parting Ø (mm)	Cat. No.	Stock	Insert	Dimensions (mm) b	h	h1	f	L	L1	Screw	Wrench
2	20	JCGSSR/L1010-20	●	GE20	10	10	10	10.2	125	15	CSTB-3	T-9F
	25	JCGSSR/L1212-20	●		12	12	12	12.2	125	19		
	32	JCGSSR/L1616-20	●		16	16	16	16.2	125	22.5		

Inserts: P. 201 ~ 202

Parting and External operations

Replacement parts for:
CGWS R/L
CGWT R/L

Replacement parts		
Screw	Screw for blade	Wrench
CHHM5-18	CSHB-6	P-4

CGWS R/L

● Standard stock in Europe
GE**R/L: only for parting

Vertical type

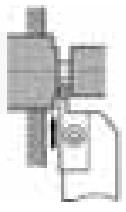

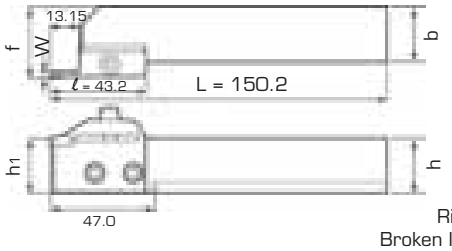

Right holder, right blade shown
Broken line shows shank size 20 mm

Grooving width W (mm)	Grooving depth (mm)	Cat. No.	Stock R	Stock L	Inserts	Dimensions (mm) b	h	h1	f	Parts Holder	Stock R	Stock L	Blade	Stock R	Stock L
2	12	CGWSR/L2020-20GR/L	●	●	GE20	20	20	20	26.8	CGWSR/L2020	●	●	20GR/L	●	●
		CGWSR/L2525-20GR/L	●	●		25	25	25	31.8	CGWSR/L2525	●	●		●	●
3	12	CGWSR/L2020-30GR/L	●	●	G*30	20	20	20	27.0	CGWSR/L2020	●	●	30GR/L	●	●
		CGWSR/L2525-30GR/L	●	●	GE30R/L	25	25	25	32.0	CGWSR/L2525	●	●		●	●
4	12	CGWSR/L2020-40GR/L	●	●	G*40	20	20	20	27.1	CGWSR/L2020	●	●	40GR/L	●	●
		CGWSR/L2525-40GR/L	●	●	GE40R/L	25	25	25	32.1	CGWSR/L2525	●	●		●	●
5	12	CGWSR/L2020-50GR/L	●		G*50	20	20	20	27.2	CGWSR/L2020	●	●	50GR/L	●	●
		CGWSR/L2525-50GR/L	●		GE50R/L	25	25	25	32.2	CGWSR/L2525	●	●		●	●

Inserts: P. 201 ~ 202

CGWT R/L

GE**R/L: only for parting

Horizontal type

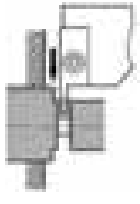

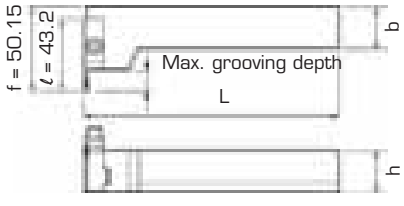

Right holder, left blade shown
Broken line shows shank size 20 mm

Grooving width W (mm)	Grooving depth (mm)	Holder set	Stock R	Stock L	Inserts	Dimensions (mm) b	h	L	Parts Holder	Stock R	Stock L	Blade	Stock R	Stock L
3	12	CGWTR/L2020-30GL/R			G*30	20	20	150.3	CGWTR/L2020	●	●	30GL/R	●	●
		CGWTR/L2525-30GL/R			GE30R/L	25	25		CGWTR/L2525	●	●		●	●
4	12	CGWTR/L2020-40GL/R			G*40	20	20	150.4	CGWTR/L2020	●	●	40GL/R	●	●
		CGWTR/L2525-40GL/R			GE40R/L	25	25		CGWTR/L2525	●	●		●	●
5	12	CGWTR/L2020-50GL/R			G*50	20	20	150.5	CGWTR/L2020	●	●	50GL/R	●	●
		CGWTR/L2525-50GL/R			GE50R/L	25	25		CGWTR/L2525	●	●		●	●

Inserts: P. 201 ~ 202

Internal operations

S***-CGT R/L

● Standard stock in Europe

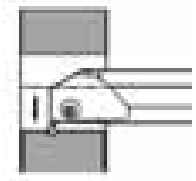

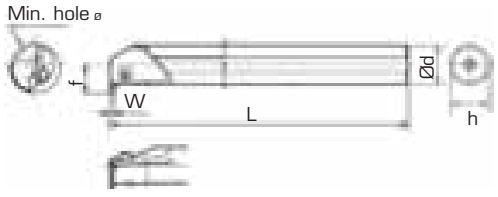

Right hand (R) shown

Grooving width W (mm)	Min. hole Ø (mm)	Grooving depth (mm)	Cat. No.	Stock R	Stock L	Inserts	Dimensions (mm) Ød	f	L	h	Screw	Wrench
3	Ø 25	3.5	S20Q-CGTR/L30	●	●	G*30	20	14.5	180	18	BHM5-14	P-3
	Ø 32	5	S25R-CGTR/L30	●	●		25	18.5	200	23		
4	Ø 32	5	S25R-CGTR/L40	●	●	G*40	25	18.5	200	23		
	Ø 40	5	S32S-CGTR/L40	●	●		32	23.0	250	30		
5	Ø 32	6	S25R-CGTR/L50	●	●	G*50	25	18.5	200	23		
	Ø 40	6	S32S-CGTR/L50	●	●		32	23.0	250	30		

Inserts: P. 201 ~ 202

Parting

CCH**-**

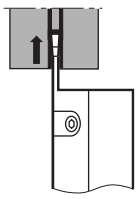

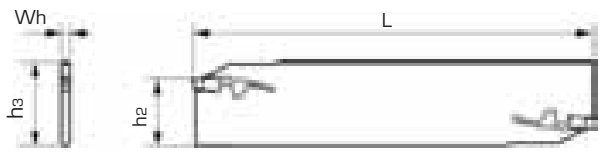

Grooving width (mm)	Cat. No. Blade	Stock	Inserts	Max. Parting Ø (mm)	Dimensions (mm) Wh	h2	h3	L	Wrench for inserts
3	CCH26-30	●	GE30 (R/L)	70	2.2	21.40	24.86	110	CTL-2
4	CCH26-40	●	GE40 (R/L)	70	3.2	21.26	24.59	110	
5	CCH26-50	●	GE50 (R/L)	70	4.2	21.13	24.32	110	
3	CCH32-30	●	GE30 (R/L)	100	2.2	24.60	31.31	150	
4	CCH32-40	●	GE40 (R/L)	100	3.2	24.47	31.04	150	
5	CCH32-50	●	GE50 (R/L)	120	4.2	24.33	30.77	150	

Inserts: P. 201 ~ 202

CCBS**-32

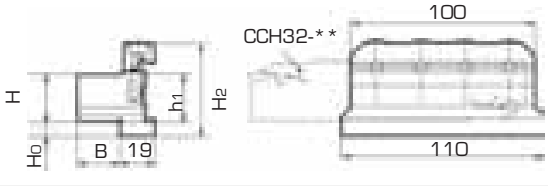

Cat. No. Block	Stock	Blade	Dimensions (mm) h1	B	H	H0	H2	Wedge	Screw	Wrench
CCBS20-32	●	CCH32-**	20.2	19	20	13	49.9	CC-32	CM6X25	P-5
CCBS25-32	●		25.2	23	25	8	49.9			
CCBS32-32	●		32.2	23	32	5	53.9			

Facing

*Screw...
CGWSR****-**S****R
CGWSR****-**D****R

Replacement parts			
Screw		Screw for blade	Wrench
S	CHHM5-18	CSHB-6	P-4
D	CM5X0.8X16		

CGWS R/L

Vertical type

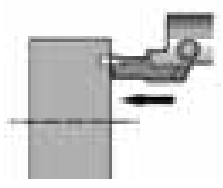

CGWSR****-*******R

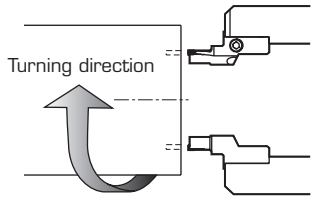

Right hand (R)
Right holder, right blade shown

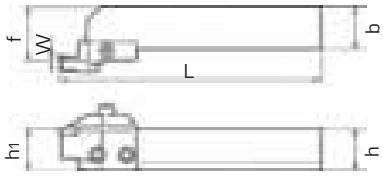

Right holder, right blade shown
Broken line shows shank size 20 mm

CGWSL****-*******L

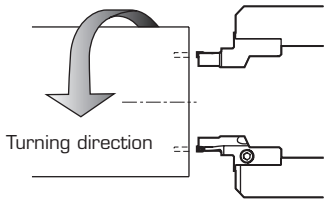

Left hand (L)
Left holder, left blade shown

Grooving width W (mm)	Groove-Ø (mm)	Grooving depth (mm)	Holder set	Stock R	Stock L	Inserts	Dimensions (mm) b	h	h1	f	L	Parts Cat. No. Holder	Stock R	Stock L	Cat. No. Blade	Stock R	Stock L
3	30-40	10	CGWSR/L2020-30S3040R/L			G*30	20	20	20	27	152.5	CGWSR/L2020	●	●	30S3040R/L	●	●
	40-50		CGWSR/L2020-30S4050R/L												30S4050R/L	●	●
	50-65		CGWSR/L2020-30S5065R/L												30S5065R/L	●	●
	65-90		CGWSR/L2020-30S6590R/L												30S6590R/L	●	●
	90-150		CGWSR/L2020-30S90150R/L												30S90150R/L	●	●
	150-500		CGWSR/L2020-30S150500R/L												30S150500R/L	●	●
	30-40		CGWSR/L2525-30S3040R/L			G*30	25	25	25	32	152.5	CGWSR/L2525	●	●	30S3040R/L	●	●
	40-50		CGWSR/L2525-30S4050R/L												30S4050R/L	●	●
	50-65		CGWSR/L2525-30S5065R/L												30S5065R/L	●	●
	65-90		CGWSR/L2525-30S6590R/L												30S6590R/L	●	●
	90-150		CGWSR/L2525-30S90150R/L												30S90150R/L	●	●
	150-500		CGWSR/L2525-30S150500R/L												30S150500R/L	●	●
4	35-45	14	CGWSR/L2020-40S3545R/L			G*40	20	20	20	27	152.5	CGWSR/L2020	●	●	40S3545R/L	●	●
	45-55		CGWSR/L2020-40S4555R/L												40S4555R/L	●	●
	55-80		CGWSR/L2020-40S5580R/L												40S5580R/L	●	●
	80-140		CGWSR/L2020-40S80140R/L												40S80140R/L	●	●
	140-500		CGWSR/L2020-40S140500R/L												40S140500R/L	●	●

Inserts: P. 201 ~ 202

● Standard stock in Europe

Grooving width W (mm)	Groove-Ø (mm)	Grooving depth (mm)	Holder set	Stock R	Stock L	Inserts	Dimensions (mm) b	h	h1	f	L	Parts Cat. No. Holder	Stock R	Stock L	Cat. No. Blade	Stock R	Stock L
4	35-45	14	CGWSR/L2525-40S3545R/L			G*40	25	25	25	32	152.5	CGWSR/L2525	●	●	40S3545R/L	●	●
	45-55		CGWSR/L2525-40S4555R/L												40S4555R/L	●	●
	55-80		CGWSR/L2525-40S5580R/L												40S5580R/L	●	●
	80-140		CGWSR/L2525-40S80140R/L												40S80140R/L	●	●
	140-500		CGWSR/L2525-40S140500R/L												40S140500R/L	●	●
4	35-45	22	CGWSR/L2020-40D3545R/L			G*40	20	20	20	27	160.5	CGWSR/L2020	●	●	40D3545R/L	●	●
	45-55		CGWSR/L2020-40D4555R/L												40D4555R/L	●	●
	55-80		CGWSR/L2020-40D5580R/L												40D5580R/L	●	●
	80-140		CGWSR/L2020-40D80140R/L												40D80140R/L	●	●
	140-500		CGWSR/L2020-40D140500R/L												40D140500R/L	●	●
	35-45		CGWSR/L2525-40D3545R/L			G*40	25	25	25	32	160.5	CGWSR/L2525	●	●	40D3545R/L	●	●
	45-55		CGWSR/L2525-40D4555R/L												40D4555R/L	●	●
	55-80		CGWSR/L2525-40D5580R/L												40D5580R/L	●	●
	80-140		CGWSR/L2525-40D80140R/L												40D80140R/L	●	●
	140-500		CGWSR/L2525-40D140500R/L												40D140500R/L	●	●
5	35-45	14	CGWSR/L2020-50S3545R/L			G*50	20	20	20	27	152.5	CGWSR/L2020	●	●	50S3545R/L	●	●
	45-55		CGWSR/L2020-50S4555R/L												50S4555R/L	●	●
	55-75		CGWSR/L2020-50S5575R/L												50S5575R/L	●	●
	75-130		CGWSR/L2020-50S75130R/L												50S75130R/L	●	●
	130-500		CGWSR/L2020-50S130500R/L												50S130500R/L	●	●
	35-45		CGWSR/L2525-50S3545R/L			G*50	25	25	25	32	152.5	CGWSR/L2525	●	●	50S3545R/L	●	●
	45-55		CGWSR/L2525-50S4555R/L												50S4555R/L	●	●
	55-75		CGWSR/L2525-50S5575R/L												50S5575R/L	●	●
	75-130		CGWSR/L2525-50S75130R/L												50S75130R/L	●	●
	130-500		CGWSR/L2525-50S130500R/L												50S130500R/L	●	●
5	35-45	22	CGWSR/L2020-50D3545R/L			G*50	20	20	20	27	160.5	CGWSR/L2020	●	●	50D3545R/L	●	●
	45-55		CGWSR/L2020-50D4555R/L												50D4555R/L	●	●
	55-75		CGWSR/L2020-50D5575R/L												50D5575R/L	●	●
	75-130		CGWSR/L2020-50D75130R/L												50D75130R/L	●	●
	130-500		CGWSR/L2020-50D130500R/L												50D130500R/L	●	●
	35-45		CGWSR/L2525-50D3545R/L			G*50	25	25	25	32	160.5	CGWSR/L2525	●	●	50D3545R/L	●	●
	45-55		CGWSR/L2525-50D4555R/L												50D4555R/L	●	●
	55-75		CGWSR/L2525-50D5575R/L												50D5575R/L	●	●
	75-130		CGWSR/L2525-50D75130R/L												50D75130R/L	●	●
	130-500		CGWSR/L2525-50D130500R/L												50D130500R/L	●	●

Inserts: P. 201 ~ 202

Facing

*Screw...
CGWTR****-**S****L
CGWTR****-**D****L

Replacement parts			
Screw		Screw for blade	Wrench
S	CHHM5-18	CSHB-6	P-4
D	CM5X0.8X16		

CGWT R/L

Horizontal type

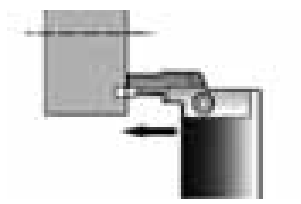

CGWTR****-*******L

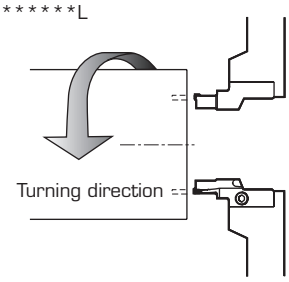

Right hand (R)
Right holder, left blade shown

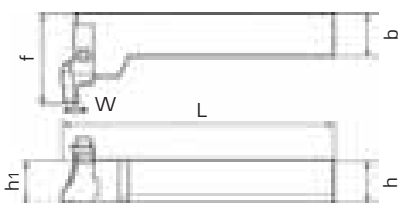

Right holder, left blade shown
Broken line shows shank size 20 mm

CGWTL****-*******R

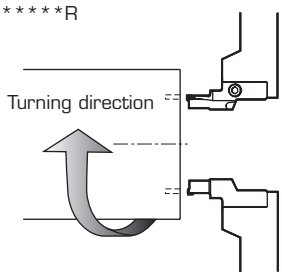

Left hand (L)
Left holder, right blade shown

Grooving width W (mm)	Groove-Ø (mm)	Grooving depth (mm)	Holder set	Stock R	Stock L	Inserts	Dimensions (mm) b	h	h1	f	L	Parts Cat. No. Holder	Stock R	Stock L	Cat. No. Blade	Stock R	Stock L
3	30-40	10	CGWTR/L2020-30S3040L/R			G*30	20	20	20	52.5	150	CGWTR/L2020	●	●	30S3040L/R	●	●
	40-50		CGWTR/L2020-30S4050L/R												30S4050L/R	●	●
	50-65		CGWTR/L2020-30S5065L/R												30S5065L/R	●	●
	65-90		CGWTR/L2020-30S6590L/R												30S6590L/R	●	●
	90-150		CGWTR/L2020-30S90150L/R												30S90150L/R	●	●
	150-500		CGWTR/L2020-30S150500L/R												30S150500L/R	●	●
	30-40		CGWTR/L2525-30S3040L/R			G*30	25	25	25	52.5	150	CGWTR/L2525	●	●	30S3040L/R	●	●
	40-50		CGWTR/L2525-30S4050L/R												30S4050L/R	●	●
	50-65		CGWTR/L2525-30S5065L/R												30S5065L/R	●	●
	65-90		CGWTR/L2525-30S6590L/R												30S6590L/R	●	●
	90-150		CGWTR/L2525-30S90150L/R												30S90150L/R	●	●
	150-500		CGWTR/L2525-30S150500L/R												30S150500L/R	●	●
4	35-45	14	CGWTR/L2020-40S3545L/R			G*40	20	20	20	52.5	150	CGWTR/L2020	●	●	40S3545L/R	●	●
	45-55		CGWTR/L2020-40S4555L/R												40S4555L/R	●	●
	55-80		CGWTR/L2020-40S5580RL/R												40S5580L/R	●	●
	80-140		CGWTR/L2020-40S80140L/R												40S80140L/R	●	●
	140-500		CGWTR/L2020-40S140500L/R												40S140500L/R	●	●

Inserts: P. 201 ~ 202

● Standard stock in Europe

Grooving width W (mm)	Groove-Ø (mm)	Grooving depth (mm)	Holder set	Stock R	Stock L	Inserts	Dimensions (mm) b	h	h1	f	L	Parts Cat. No. Holder	Stock R	Stock L	Cat. No. Blade	Stock R	Stock L
4	35-45	14	CGWTR/L2525-40S3545L/R			G*40	25	25	25	52.5	150	CGWTR/L2525	●	●	40S3545L/R	●	●
	45-55		CGWTR/L2525-40S4555L/R												40S4555L/R	●	●
	55-80		CGWTR/L2525-40S5580L/R												40S5580L/R	●	●
	80-140		CGWTR/L2525-40S80140L/R												40S80140L/R	●	●
	140-500		CGWTR/L2525-40S140500L/R												40S140500L/R	●	●
4	35-45	22	CGWTR/L2020-40D3545L/R			G*40	20	20	20	60.5	150	CGWTR/L2020	●	●	40D3545L/R	●	●
	45-55		CGWTR/L2020-40D4555L/R												40D4555L/R	●	●
	55-80		CGWTR/L2020-40D5580L/R												40D5580L/R	●	●
	80-140		CGWTR/L2020-40D80140L/R												40D80140L/R	●	●
	140-500		CGWTR/L2020-40D140500L/R												40D140500L/R	●	●
	35-45		CGWTR/L2525-40D3545L/R			G*40	25	25	25	60.5	150	CGWTR/L2525	●	●	40D3545L/R	●	●
	45-55		CGWTR/L2525-40D4555L/R												40D4555L/R	●	●
	55-80		CGWTR/L2525-40D5580L/R												40D5580L/R	●	●
	80-140		CGWTR/L2525-40D80140L/R												40D80140L/R	●	●
	140-500		CGWTR/L2525-40D140500L/R												40D140500L/R	●	●
5	35-45	14	CGWTR/L2020-50S3545L/R			G*50	20	20	20	52.5	150	CGWTR/L2020	●	●	50S3545L/R	●	●
	45-55		CGWTR/L2020-50S4555L/R												50S4555L/R	●	●
	55-75		CGWTR/L2020-50S5575L/R												50S5575L/R	●	●
	75-130		CGWTR/L2020-50S75130L/R												50S75130L/R	●	●
	130-500		CGWTR/L2020-50S130500L/R												50S130500L/R	●	●
	35-45		CGWTR/L2525-50S3545L/R			G*50	25	25	25	52.5	150	CGWTR/L2525	●	●	50S3545L/R	●	●
	45-55		CGWTR/L2525-50S4555L/R												50S4555L/R	●	●
	55-75		CGWTR/L2525-50S5575L/R												50S5575L/R	●	●
	75-130		CGWTR/L2525-50S75130L/R												50S75130L/R	●	●
	130-500		CGWTR/L2525-50S130500L/R												50S130500L/R	●	●
5	35-45	22	CGWTR/L2020-50D3545L/R			G*50	20	20	20	60.5	150	CGWTR/L2020	●	●	50D3545L/R	●	●
	45-55		CGWTR/L2020-50D4555L/R												50D4555L/R	●	●
	55-75		CGWTR/L2020-50D5575L/R												50D5575L/R	●	●
	75-130		CGWTR/L2020-50D75130L/R												50D75130L/R	●	●
	130-500		CGWTR/L2020-50D130500L/R												50D130500L/R	●	●
5	35-45		CGWTR/L2525-50D3545L/R			G*50	25	25	25	60.5	150	CGWTR/L2525	●	●	50D3545L/R	●	●
	45-55		CGWTR/L2525-50D4555L/R												50D4555L/R	●	●
	55-75		CGWTR/L2525-50D5575L/R												50D5575L/R	●	●
	75-130		CGWTR/L2525-50D75130L/R												50D75130L/R	●	●
	130-500		CGWTR/L2525-50D130500L/R												50D130500L/R	●	●

Inserts: P. 201 ~ 202

Application detail

An example of tool integration in Traverse feed machining

Previously, this operation has been carried out by using two external profiling tools, one left and one right hand. By switching to My-T series tooling, the number of tools required could be reduced to only one tool (GT type for traverse feeding or GR type for profiling).

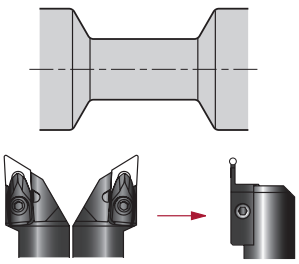

Comparison of surface roughness (conventional tool vs. GT insert)

because the tip of GT-type insert slightly tilts during machining and acts like a wiper cutting edge, it can produce a better surface finish than when using a conventional insert.

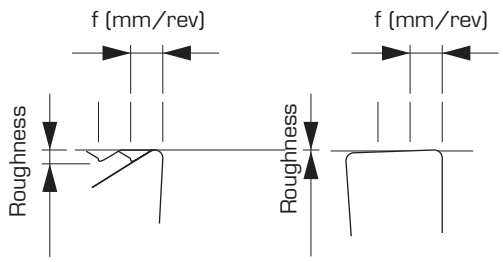

Method of deep grooving

When deep grooving, the procedures shown at right are recommended.

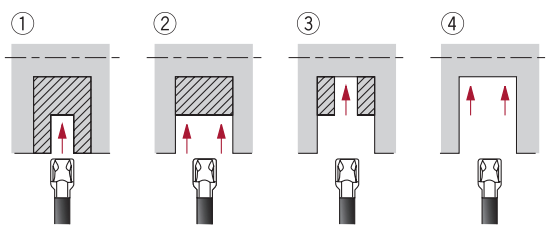

Machining of various grooves

When machining a constricted portion of a cylindrical workpiece, choose the suitable method depending on the width and depth of the groove to be machined.

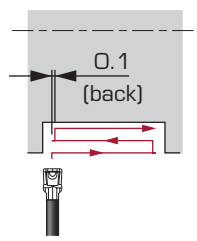

shallow / wide groove

Chamfering and rounding-off at bottom corner of groove

When chamfering or rounding-off at the bottom corner of a groove, the procedures shown in the figure at the right are recommended.

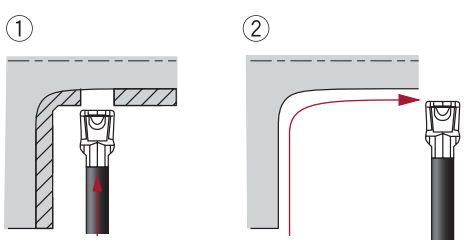

Method of finishing double-sided walls

When finishing both sides of a groove by using GT-type inserts, retract feed mode should be avoided. You should machine both side walls by plunging and then machine the bottom of the groove by traversing the tool.

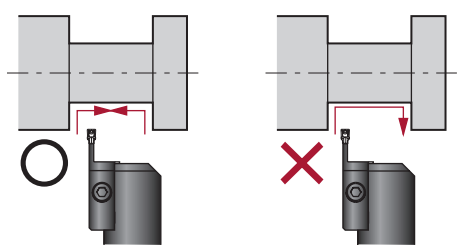

Machining method of groove bottom close to a shoulder

When machining the bottom surface of a groove by traverse feeding, chip recutting can occur close to the wall. Stop the feed short of the wall (remaining width less than front edge width of insert), and then remove the remaining stock by plunging.

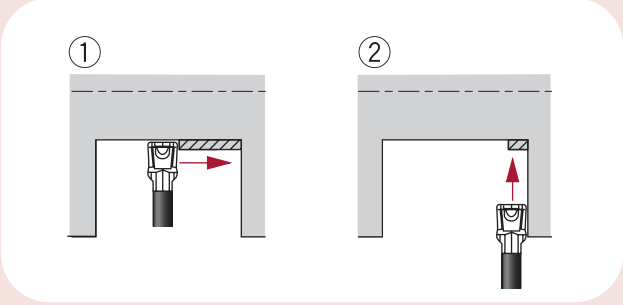

Comparison of surface roughness

When machining the outer diameter of a workpiece by traverse feeding, a ring like material can be produced as shown in the figure at right. In this case, stop the feed short of the work end. (Remaining width to be less than the front edge width of insert) andd then remove the remaining stock by plunging.

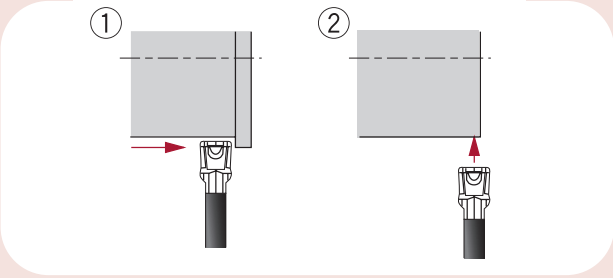

Method of machining with full radius insert

When machining a groove wall by using a full-radius insert, plunge cut is recommended for roughing and retract feeding is possible for finishing. Cutting depth should be smaller than 5 % of insert radius.

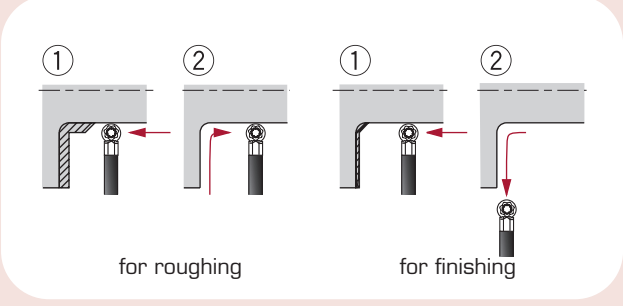

Method of widening groove width of face groove

When widening the width of a face groove, choose the blade to fit to the largest diameter, and then enlarge the width inward.

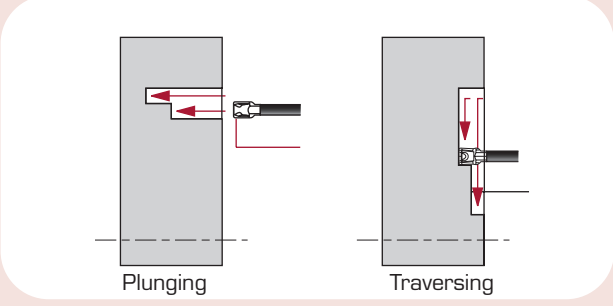

Method of face profiling

When profiling a face groove, the tool should be fed from outer diameter towards the centre. The inner wall of the groove should be machined by plunging.

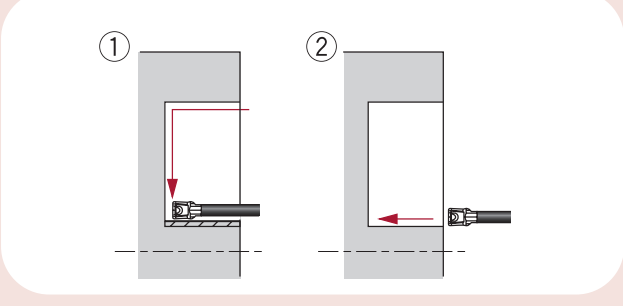

Method of widening groove width of internal groove

When widening the groove width of an internal groove, the method used should be basically the same as that of external grooving.

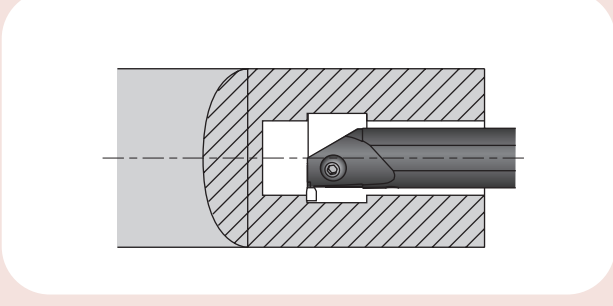

Cautionary point in use

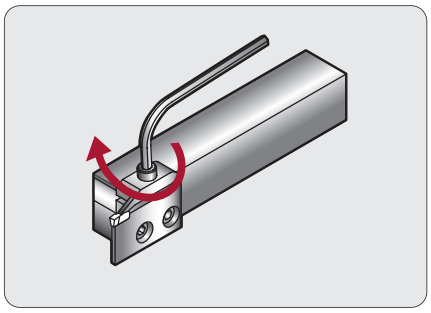

Recommended tightening torque of the clamp screw is 4 to 5 Nm.

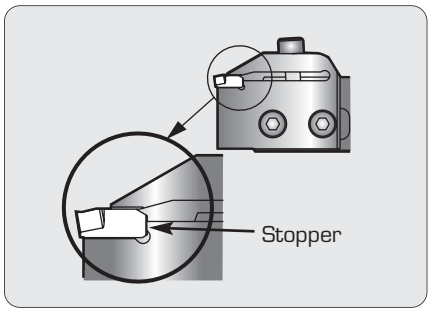

Place insert by hand into the pocket until rear stop.

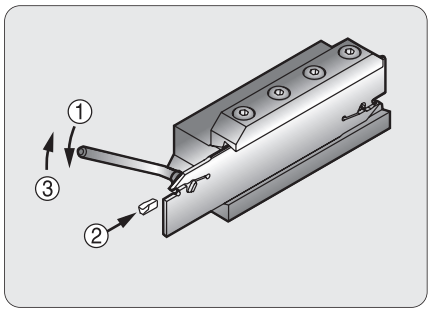

1. Place wrench into the specified hole of the blade and push it down.
2. Place insert by hand into the pocket until rear stop.
3. Push wrench upward until insert is firmly clamped.

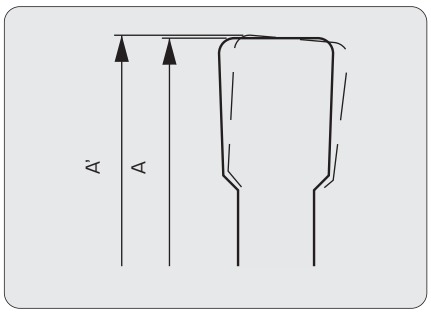

In traverse feed machining, the tip of the tool can be elastically deformed. At extreme cutting conditions, the diameter of the workpiece may exceed programmed dimensions. Dimensional compensation of the outer diameter as shown in the right diagram have to be taken into consideration when programming (example: medium carbon steel).

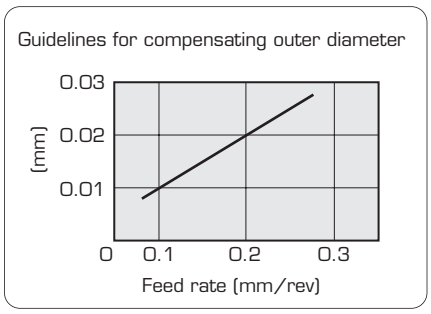

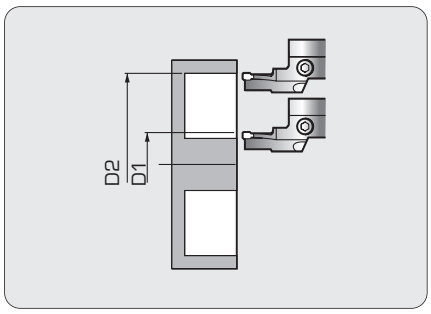

When face grooving, the blade diameter should match the machinable diameter of the workpiece. The applicable blades are shown in this brochure. In the left figure, D2 shows the machinable maximum diameter and D1 the machinable minimum diameter. This limitation only applies to grooving operations.

Troubleshooting

Trouble / Counter measures	Stringy chips (Grooving)	Stringy chips (Turning)	Chatter	Poor surface finish	Out of tolerance	Excessive insert wear	Insert breakage
Increase feed rate	●	●	●				
Reduce feed rate				●		●	●
Increase cutting depth		●					
Reduce cutting depth			●	●		●	●
Increase cutting speed				●			
Reduce cutting speed	●	●	●		●	●	●
Use Cermet grade				●			
Use coated grade							●
Use step feed	●						
Use coolant				●		●	
Check compensation for tool deformation					●		
Check tool failure				●	●		
Choose optimum chipbeaker	●	●	●	●	●	●	●
Shorten tool overhang			●				
Use both cutting edges equally						●	●

CTH-type Toolholder

Parting

CTH

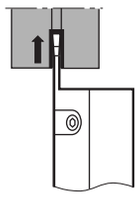

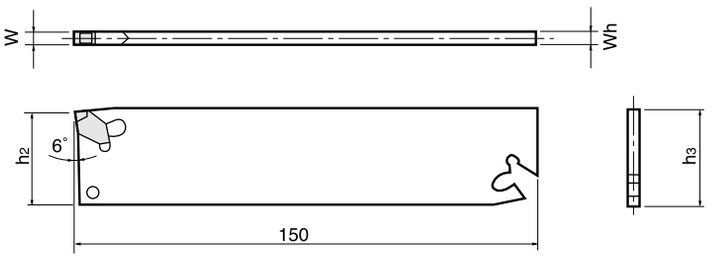

Grooving width W (mm)	Cat. No. Blade	Stock	Insert	Tool overhang ad (mm)	Dimensions (mm)		
					Wh	h_2	h_3
3	**CTH32-3**	●	**CT□3□**	Max. 50	2.2	30.27	32.24
4	**CTH32-4**	●	**CT□4□**		3.2	30.13	31.97
5	**CTH32-5**	●	**CT□5□**		4.2	30.00	31.70
6	**CTH32-6**	●	**CT□6□**		5.2	29.87	31.44

■ Tool blocks

One-piece type CTBN

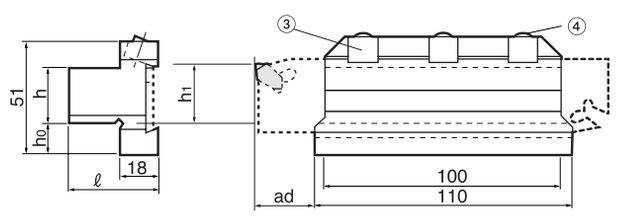

Two-piece type CTBS

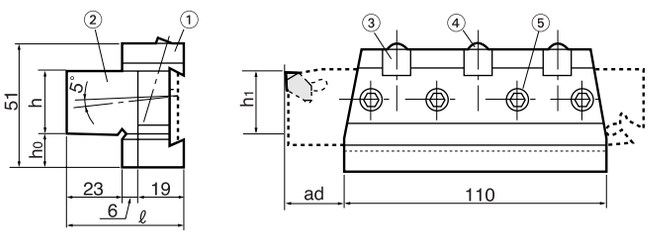

Cat. No. Block	Stock	Blades	Tool overhang ad (mm)	Dimensions (mm)			
				h_1	ℓ	h	h_0
CTBN20-32	●	**CTH32-3** **CTH32-4** **CTH32-5** **CTH32-6**	Max. 50	20.2	38	20	19.56
CTBN25-32	●			25.2	38	25	14.56
CTBN32-32	●			32.2	43	32	7.56
CTBS20-32				20.2	48	20	19.36
CTBS25-32				25.2	48	25	14.36
CTBS32-32				32.2	48	32	7.36

■ Replacement parts

Cat. No. Block	Cat. No.					
	① Main body	② Base	③ Wedge	④ Wedge clamping screw	⑤ Hex. socket head screw	Wrench
CTBN20-32 **CTBN25-32** **CTBN32-32**	—	—	CTW-2	NDS-8S	—	P-4
CTBS20-32 **CTBS25-32** **CTBS32-32**	CTB-32	CB-20 CB-25 CB-32	CTW-2	DS-8	M5×15	P-4

● Insert extractor: CTL-2

Reference guide | Applicable inserts P. 216

CTS-type Toolholder (Blade type)

Parting

CTS R/L

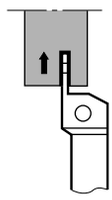

● Blade

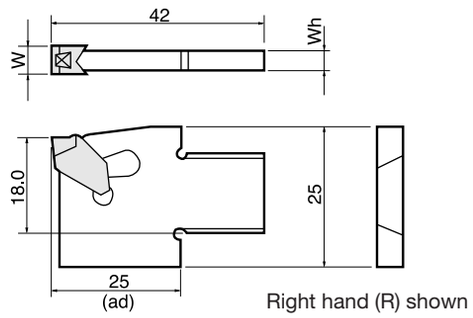

Right hand (R) shown

Dimensions (mm)		Cat. No. Blade	Stock		Inserts	Tool overhang ad (mm)
W	Wh		R	L		
3	2.2	**CTSR/L25-3**			**CT□3□**	Max. 25
4	3.2	**CTSR/L25-4**			**CT□4□**	
5	4.2	**CTSR/L25-5**			**CT□5□**	
6	5.2	**CTSR/L25-6**			**CT□6□**	

■ Toolholder

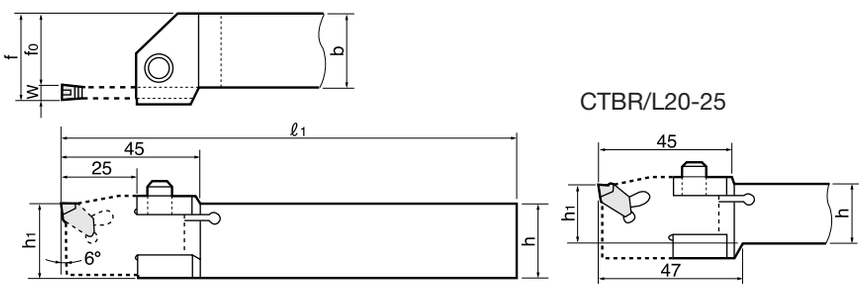

Right hand (R) shown

Grooving width W (mm)	Cat. No. Toolholder	Stock		Blade	Tool overhang ad (mm)	Dimensions (mm)						Parts	
		R	L			h_1	h	b	ℓ_1	fo	f	Clamping Screw	Wrench
3	**CTBR/L20-25**			**CTSR/L25-3**	Max. 25	20.2	20	20	150	19.6	22.6	M6×20	P-5
4				**CTSR/L25-4**							23.6		
3	**CTBR/L25-25**			**CTSR/L25-3**		25.2	25	25	150	24.6	27.6	M6×20	P-5
4				**CTSR/L25-4**							28.6		
5				**CTSR/L25-5**							29.6		
6				**CTSR/L25-6**							30.6		

Inserts for Parting (CTH · CTS · SCTH-type)

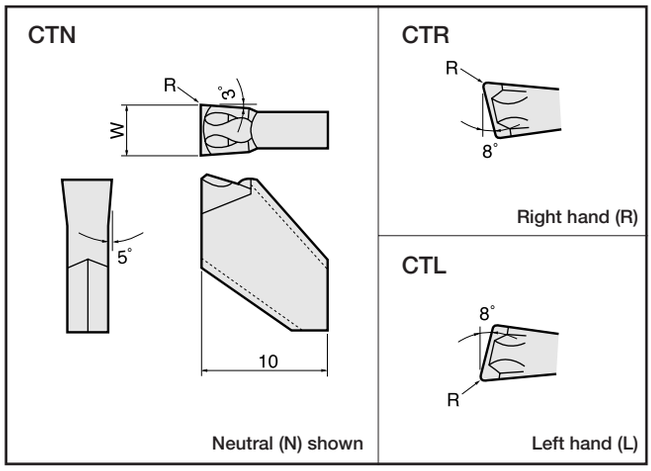

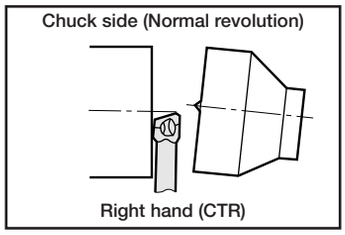

Notes:
- Right hand and left hand inserts are effective to minimize burr generation when workpiece is parting.
- CT□□K type inserts with less pre-honed edges are suitable for grooving and parting of cast irons and light alloys.

Dimensions (mm)		Cat. No.	Grade								
			Coated			Uncoated					
			T313W			TX40			TH10		
W±0.2	R		N	R	L	N	R	L	N	R	L
3	0.2	CTN3	●			●					
		CTN3K							●		
		CTR/L3		●	●		●				
		CTR/L3K								●	●
4	0.2	CTN4	●			●					
		CTN4K							●		
		CTR/L4		●	●		○	○			
		CTR/L4K								●	●
5	0.3	CTN5	●			●					
		CTN5K							●		
		CTR/L5		●			○				
		CTR/L5K									
6	0.3	CTN6	●			●					
		CTN6K							●		
		CTR/L6									
		CTR/L6K									

■ Standard cutting conditions

Operation	Work materials	Cutting speed Vc (m/min)	Feed f (mm/rev)					
			CTN3	CTN4	CTN5	CTN6	CTR/L□	CT□□K
Grooving	Low carbon steels	100~150	0.08~0.25	0.08~0.25	0.08~0.25	0.08~0.3	—	—
	Medium carbon steels		0.08~0.25	0.08~0.3	0.08~0.3	0.08~0.3	—	—
	Cast irons · Light alloys	100~200	—	—	—	—	—	0.1~0.3
Parting	Low carbon steels	100~150	0.08~0.2	0.08~0.2	0.08~0.2	0.08~0.2	0.08~0.15	—
	Medium carbon steels		0.08~0.2	0.08~0.2	0.08~0.2	0.08~0.2	0.08~0.15	—
	Cast irons · Light alloys	100~200	—	—	—	—		0.1~0.3

Note: When using CTS type (blade type) toolholder, reduce the values given in the table by 20%.

SCTH-type Toolholder

Parting

SCTH

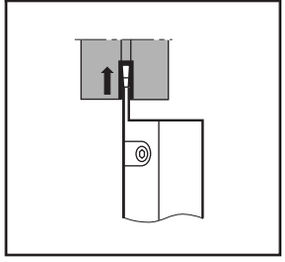

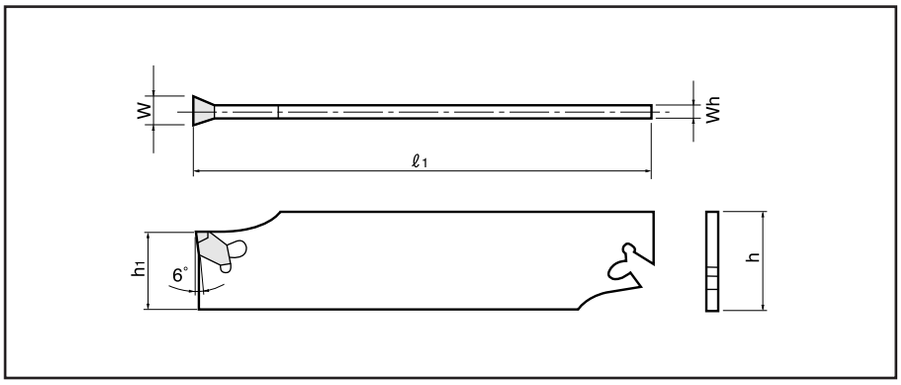

Cat. No.	Stock	Dimensions (mm)					Cat. No. Block		Inserts
		W	h1	Wh	h	ℓ1			
SCTH26-3	●	3	21.16	2.2	25.35	110	SGTBR/L25-6,	SGTBN16-5	CT□3□
SCTH26-4	●	4	21.05	3.2	25.14		SGTBN19-5,	SGTBU20-5	CT□4□
SCTH32-3	●	3	24.80	2.2	31.41	150	SGTBN19-6,	SGTBN25-6	CT□3□
SCTH32-4	●	4	24.66	3.2	31.14		SGTBN32-6,	SGTBU20-6	CT□4□
SCTH32-5	●	5	24.53	4.2	30.87		SGTBU25-6,	SGTBU32-6	CT□5□
SCTH32-6	●	6	24.39	5.2	30.61		SGTBU32-25-6,	SGTBK32-9	CT□6□

Note: Please take care that these blades are compatible only with the tool blocks shown in the above table.

CTW-type Toolholder

Parting and grooving

CTW R/L

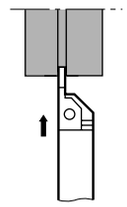

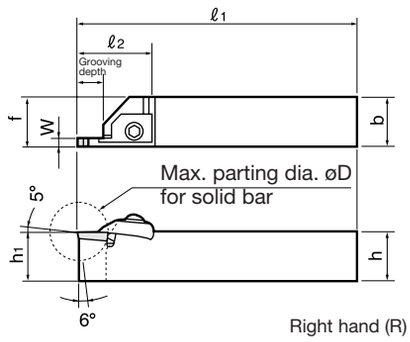

Right hand (R) shown

■ Replacement parts

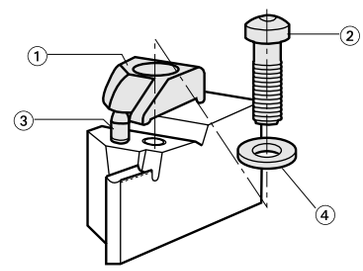

Grooving width W(mm)	Grooving depth (mm)	Cat. No.	Stock R	Stock L	Inserts	Dimensions (mm) øD	h1	b	h	ℓ1	ℓ2	f	Parts ① Clamp	② Clamping screw	③ Clamping pusher	④ Washer	Wrench
3	14	CTWR/L2020-3	●	●	CTD3	32	20	20	20	150	41	20.25	CTC-3R/L	CTS-M6	BP-360	CDW6	P-4
		CTWR/L2525-3	●	●		32	25	25	25			25.25					
4		CTWR/L2020-4	●	●	CTD4	32	20	20	20	150	41	20.25	CTC-4R/L				
		CTWR/L2525-4	●	●		32	25	25	25			25.25					
5	20	CTWR/L2525-5	●	●	CTD5	42	25	25	25	150	46	25.25	CTC-5R/L				

■ Inserts

CTD

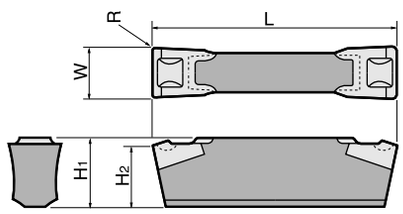

Insert Cat. No.	Grade Coated T370	Grade Coated GH340	Dimensions (mm) W±0.1	L	H1	H2	R
CTD3	●	●	3.0	20	4.3	4	0.2
CTD4	●	●	4.0	20	5.3	5	0.2
CTD5	●	●	5.0	25	6.3	6	0.2

■ Standard cutting conditions

Operation	Work materials	Cutting speed Vc (m/min)	Feed f (mm/rev) CTD3	CTD4	CTD5
Grooving	Low carbon steels	100 ~ 150	0.08 ~ 0.25	0.08 ~ 0.25	0.08 ~ 0.25
	Medium carbon steels		0.08 ~ 0.25	0.08 ~ 0.30	0.08 ~ 0.30
Parting			0.08 ~ 0.15		

SGT-type Toolholder

External grooving

SGT R/L

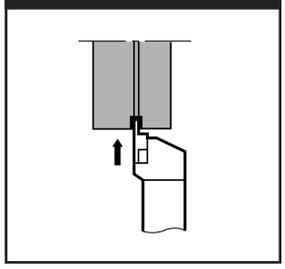

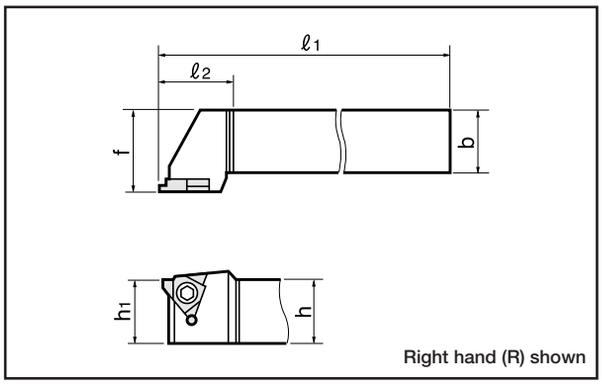

Application: Lock-ring	Application: O-ring	Cat. No.	Stock R	Stock L	Inserts	Dimensions (mm) h1	b	h	ℓ1	ℓ2	f	Parts: Clamping screw	Parts: Wrench
JIS C-type retaining rings for shaft, normal sizes: 10 - 82 JIS E-type retaining rings for shallow grooves, normal sizes: 10 - 24 JIS Uniform section C-type for shaft, normal sizes: 20 - 80	—	SGTR/L1616-3	○		GLR/L3□□□	16	16	16	100		20	CSTB-4	T-15F
		SGTR/L2020-3	●	●		20	20	20	125	20	25		
		SGTR/L2525-3	●	●		25	25	25	100		32		
JIS C-type retaining rings for shaft, normal sizes: 10 - 125 JIS E-type retaining rings for shallow grooves, normal sizes: 10 - 24 JIS Uniform section C-type for shaft, normal sizes: 20 - 200	External grooves for JIS O-ring for static and dynamic use, normal sizes: P3 - P22 and G25 - G145.	SGTR/L2020-4	●	●	GLR/L4□□□	20	20	20	125		25	CSTB-5	T-20F
		SGTR/L2525-4	●	●	GOR/L4□□□	25	25	25	150	30	32		
		SGTR/L3232-4				32	32	32	170		40		

GOR/L (O-ring)

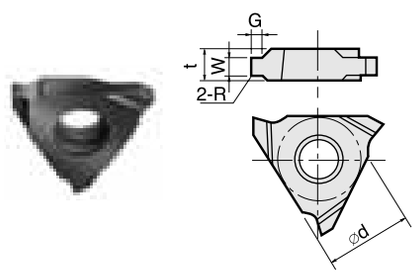

Right hand (R) shown

GLR/L (Lock-ring)

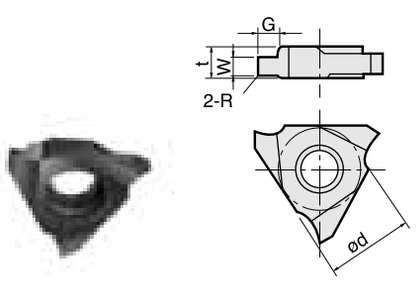

Right hand (R) shown

● GOR/L (For O-ring grooves)

Dimensions (mm) $W^{+0.1}_{+0.05}$	G	R	Inserts	Stocked grades: Cermet NS530 R	Cermet NS530 L			Uncoated UX30 R	Uncoated UX30 L	Dimensions (mm) ød	t
2.5	1.5	0.4	GOR/L4190	●				○		12.7	4.76
3.2	2.0	0.4	GOR/L4240	●				●			
4.1	2.5	0.4	GOR/L4310	●				●			

● GLR/L (For lock-ring grooves)

Dimensions (mm) $W^{+0.1}_{+0.05}$	G	R	Inserts	Stocked grades: Cermet NS530 R	Cermet NS530 L			Uncoated UX30 R	Uncoated UX30 L	Dimensions (mm) ød	t
1.15	1.5	0.1	GLR/L3115	●	●			●	●	9.525	3.18
1.35	1.5		GLR/L3135	●	●			●			
1.65	2.0		GLR/L3165	●				●	●		
1.75	2.0		GLR/L3175	●				●	●		
1.90	2.5		GLR/L3190					●	●		
1.95	2.5		GLR/L3195	●	●			●	●		
2.20	3.0		GLR/L3220	●	●			●	○		
2.70	3.0		GLR/L3270	●				●	○		
1.15	1.5	0.1	GLR/L4115	●				●		12.70	4.76
1.35	1.5		GLR/L4135	●	●			●			
1.65	2.0		GLR/L4165	●				●			
1.75	2.0		GLR/L4175	●				●			
1.90	2.5		GLR/L4190	●	●			●			
1.95	2.5		GLR/L4195	●	●			●			
2.20	3.5		GLR/L4220	●	●			●	○		
2.70	3.5		GLR/L4270	●				●			
3.20	4.0		GLR/L4320	●	●			●	○		
4.20	4.0		GLR/L4420	●	●			●	○		

■ Standard cutting conditions

Grades	Cutting speed Vc (m/min)	Feed f (mm/rev) W < 2 mm	W = 2 ~ 4 mm	W > 4 mm
NS530	80 ~ 200	0.05 ~ 0.1	0.08 ~ 0.20	0.08 ~ 0.25
UX30	60 ~ 150	0.05 ~ 0.1	0.08 ~ 0.20	0.08 ~ 0.25

GX-type Toolholder

External grooving GX-R/LE

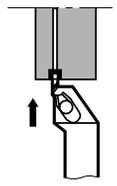

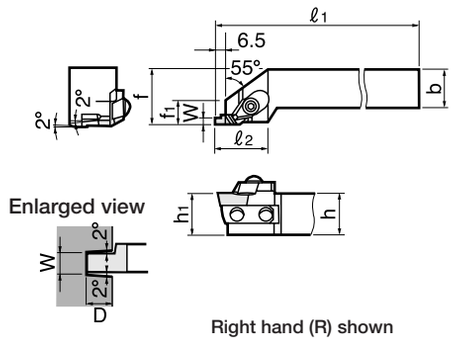

■ Replacement Parts

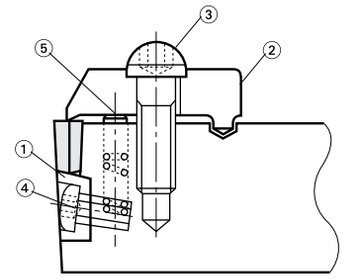

Max. grooving width (mm)	Max. grooving depth (mm)	Cat. No.	Stock R	Stock L	Inserts	Dimensions (mm) h1	b	h	ℓ1	ℓ2	f	f1	Parts ① Shim	② Clamp	③ Clamping screw	④ Shim screw	⑤ Clamping pusher	Wrench
4.5	6.0	GX-2020R/LE	●	●	XGR/L63□□	20	20	20	125	35	25	15	SL-6R/L	CP81A	RT-1	BHM4-8	BP-3	P-4
		GX-2525R/LE	●	●		25	25	25	150	35	32	15	SL-1R/L					

Internal grooving GX-R/LI

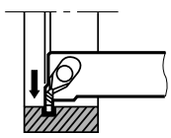

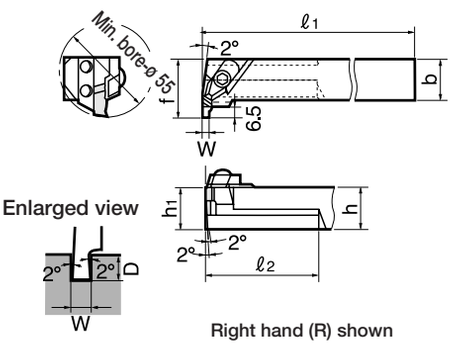

Min. bore diameter (mm)	Max. grooving width (mm)	Max. grooving depth (mm)	Cat. No.	Stock R	Stock L	Inserts	Dimensions (mm) h1	b	h	ℓ1	ℓ2	f	f1	Parts ① Shim	② Clamp	③ Clamping screw	④ Shim screw	⑤ Clamping pusher	Wrench
Ø55	4.5	6.0	GX-2020R/LI			XGL/R63□□	20	20	20	160	60	35	–	SL-7R/L	CP81B	RT-1	BHM4-8	BP-0	P-4
			GX-2525R/LI	●	●		25	25	25	200	70	35	–	SL-2R/L			BHM3-8		

Face grooving GX-R/LF

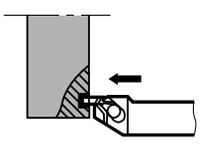

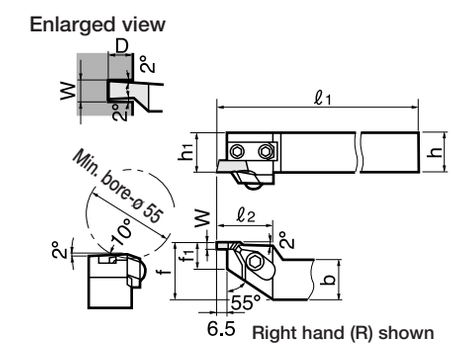

Min. bore diameter (mm)	Max. grooving width (mm)	Max. grooving depth (mm)	Cat. No.	Stock R	Stock L	Inserts	Dimensions (mm) h1	b	h	ℓ1	ℓ2	f	f1	Parts ① Shim	② Clamp	③ Clamping screw	④ Shim screw	⑤ Clamping pusher	Wrench
Ø55	4.5	6.0	GX-2020R/LF			XNL/R63□□	20	20	20	125	35	25	15	SL-8R/L	CP81A	RT-1	BHM4-8	BP-3	P-4
			GX-2525R/LF	●	●		25	25	25	150	35	32	15	SL-3R/L					

Reference guide Inserts P. 220

■ Inserts

● XGR/L (For external and internal)

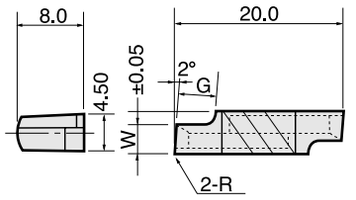

Right hand (R) shown

Dimensions (mm)				Cat. No.	Stocked grades									
					Cermet				Uncoated					
					NS530				TH10		UX30		TX10S	
W±0.05	Grooving depth	G	R		R	L			R	L	R	L	R	L
1.0	1.5	1.8	0	XGR/L6310S										
1.0	1.5	1.8	0.2	XGR/L6310-02	●	●			●	●				
1.5	2.3	2.5	0	XGR/L6315S										
1.5	2.3	2.5	0.2	XGR/L6315-02	●	●			●	●				
2.0	3.0	3.2	0	XGR/L6320S										
2.0	3.0	3.2	0.2	XGR/L6320-02	●	●			●	●				
2.5	3.8	3.9	0	XGR/L6325S										
2.5	3.8	3.9	0.2	XGR/L6325-02	●	●			●	●				
3.0	4.5	4.6	0	XGR/L6330S										
3.0	4.5	4.6	0.2	XGR/L6330-02	●	●			●	●				
3.5	5.3	5.4	0	XGR/L6335S										
3.5	5.3	5.4	0.2	XGR/L6335-02	●	●			●	●				
4.0	6.0	6.1	0	XGR/L6340S										
4.0	6.0	6.1	0.2	XGR/L6340-02	●	●			●	●				
4.5	6.0	6.1	0	XGR/L6345S										
4.5	6.0	6.1	0.2	XGR/L6345-02	●	●			●	●				

● XGR/L-QBN (For external and internal)

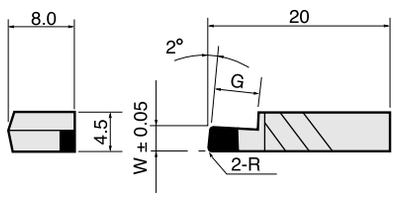

Right hand (R) shown

Dimensions (mm)				Cat. No.	PCBN BX360	
W±0.05	Grooving depth	G	R		R	L
1.0	1.5	2.5		XGR/L6310S-QBN		
1.5	2.3	2.5		XGR/L6315S-QBN	○	
2.0	3.0	3.2		XGR/L6320S-QBN	○	
2.5	3.8	3.9	0.2	XGR/L6325S-QBN	○	
3.0	4.5	4.6		XGR/L6330S-QBN	○	
3.5	5.3	5.4		XGR/L6335S-QBN	○	
4.0	6.0	6.1		XGR/L6340S-QBN	○	
4.5	6.0	6.1		XGR/L6345S-QBN	○	

● XNR/L (For facing)

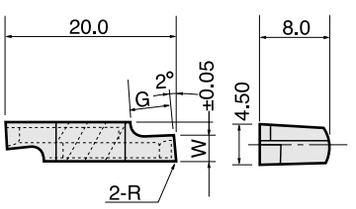

Left hand (L) shown

Dimensions (mm)				Cat. No.	Stocked grades									
					Cermet				Uncoated					
					NS530				TH10		UX30		TX10S	
W±0.05	Grooving depth	G	R		R	L			R	L			R	L
1.0	1.5	1.8	0	XNR/L6310S										
1.0	1.5	1.8	0.2	XNR/L6310-02	●	●								
1.5	2.3	2.5	0	XNR/L6315S										
1.5	2.3	2.5	0.2	XNR/L6315-02	●	●								
2.0	3.0	3.2	0	XNR/L6320S										
2.0	3.0	3.2	0.2	XNR/L6320-02	●	●								
2.5	3.8	3.9	0	XNR/L6325S										
2.5	3.8	3.9	0.2	XNR/L6325-02	●	●								
3.0	4.5	4.6	0	XNR/L6330S										
3.0	4.5	4.6	0.2	XNR/L6330-02	●	●								
3.5	5.3	5.4	0	XNR/L6335S										
3.5	5.3	5.4	0.2	XNR/L6335-02	●	●								
4.0	6.0	6.1	0	XNR/L6340S										
4.0	6.0	6.1	0.2	XNR/L6340-02	●	●								
4.5	6.0	6.1	0	XNR/L6345S										
4.5	6.0	6.1	0.2	XNR/L6345-02	●	●								

■ Standard cutting conditions (External & internal grooving)

Work materials	Grades	Cutting speed Vc (m/min)	Feed f (mm/rev)		
			W < 2 mm	W = 2 ~ 4 mm	W > 4 mm
Carbon steels	NS530	80 ~ 200	0.05 ~ 0.1	0.08 ~ 0.2	0.08 ~ 0.25
	TX10S	60 ~ 150	0.05 ~ 0.1	0.08 ~ 0.2	0.08 ~ 0.25
	UX30	60 ~ 150			
Cast irons · Light alloys	TH10	60 ~ 150	0.05 ~ 0.1	0.08 ~ 0.2	0.08 ~ 0.25

Note: When using internal and face grooving toolholder, right hand toolholder use a left hand insert and left hand toolholder use a right hand insert.

SNG · CNG-type Toolholder

Internal grooving

SNG R/L

Screw-on type

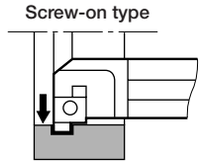

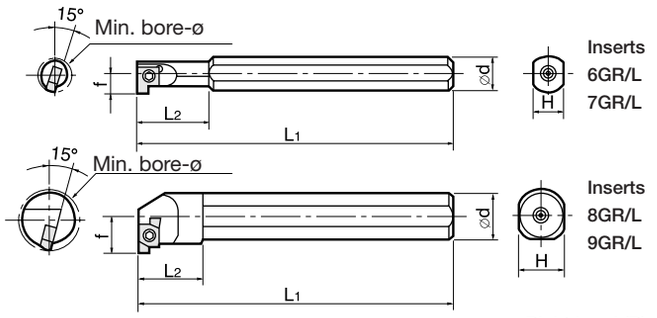

Right hand (R) shown

Max. grooving width (mm)	Min. bore dia. ØD (mm)	Max. grooving depth (mm)	Shank material	Cat. No.	Stock R	Stock L	Inserts	Dimensions (mm) ød	f	L_1	L_2	H	Parts: Clamping screw	Wrench
2.0	8	1.5	Steel	SNGR/L08H06	●	●	6GR/L□□□	8	4.7	100	18	7	CSTB-2L040	T-6F
	10			SNGR/L08H07	●	●	7GR/L□□□	8	5.8	100	23	7	CSTB-2.2S	T-7F
	12			SNGR/L10K07	●	●		10	6.8	125	29	9		
3.5	14	2.0		SNGR/L10K08	●	●	8GR/L□□□	10	7.6	125	15	9	CSTB-2.2	
	16			SNGR/L12M08	●	●		12	8.6	150	18	11		
3.5	20	3.0		SNGR/L16Q09	●	●	9GR/L□□□	16	11.6	180	20	15	CSTB-2.5L080	T-8F
	24			SNGR/L20R09	●	●		20	13.6	200	25	18		
2.0	8	1.5	Carbide	SNGR/L08K06SC	●	●	6GR/L□□□	8	4.7	125	28	7	CSTB-2L040	T-6F
	10			SNGR/L08K07SC	●	●	7GR/L□□□	8	5.8	125	35	7	CSTB-2.2S	T-7F
	12			SNGR/L10M07SC	●	●		10	6.8	150	45	9		
3.5	14	3.0		SNGR/L10M08SC	●	●	8GR/L□□□	10	7.6	150	–	9	CSTB-2.2	
	16			SNGR/L12Q08SC	●	●		12	8.6	180	–	11		
	20			SNGR/L16R09SC	●	●	9GR/L□□□	16	11.6	200	–	15	CSTB-2.5L080	T-8F

Internal grooving

CNG R/L

Clamp-on type

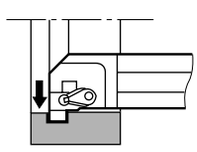

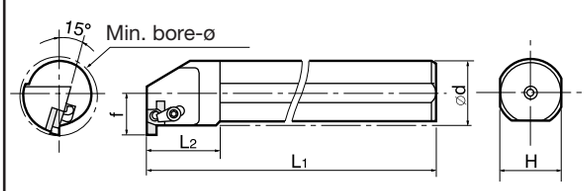

Right hand (R) shown

Max. grooving width (mm)	Min. bore dia. ØD (mm)	Max. grooving depth (mm)	Shank material	Cat. No.	Stock R	Stock L	Inserts	Dimensions (mm) ød	f	L_1	L_2	H	Parts: Clamp	Shim	Shim screw	Wrench
5.0	32	5.0	Steel	CNGR/L25S15	●	○	15GR/L□□□	25	18.1	250	30	23	CSP22	SGSR/L151	DTS5-3.5	T-20F
	40			CNGR/L32T15	●	○		32	22.1	300	35	30				
	48			CNGR/L40U15	●	○		40	26.1	350	45	38				

● **Optional parts for CNG type toolholder**

When using as a screw-on type, use the following parts.

Insert Cat. No.	Insert fix. screw	Wrench
CNGR/L25S15 CNGR/L32T15 CNGR/L40U15	CSTB-3.5L	T-15F

SNG · CNG-type Toolholder

■ Inserts

● One corner type

6GR/L□□□
7GR/L□□□

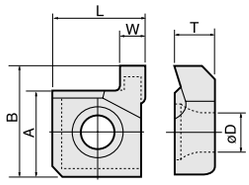

● Two corner type

8GR/L□□□
9GR/L□□□
15GR/L□□□

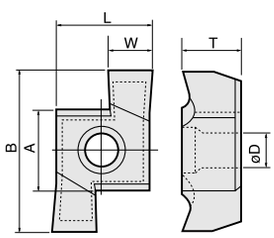

Right hand (R) shown

● Inserts for general purpose

Grooving width W±0.025 (mm)	Grooving depth (mm)	Cat. No.	Stocked grades: Cermet NS530 R	Cermet NS530 L			Uncoated TH10 R	Uncoated TH10 L	Uncoated UX30 R	Uncoated UX30 L	Dimensions (mm) A	B	T	øD	L
1.0	1.5	6GR/L100	●				●		●		4.76	6.44	2.34	2.3	5.56
1.5	1.5	6GR/L150	●				●	●	●	●					
2.0	1.5	6GR/L200	●	●			●	●	●	●					
1.0	1.5	7GR/L100	●				●		●		5.56	7.36	3.08	2.58	5.56
1.5	1.5	7GR/L150	●				●		●						
2.0	1.5	7GR/L200	●	●			●	●	●	●					
1.0	1.5	8GR/L100									5.56	10.16	3.87	2.58	6.15
1.5	2.0	8GR/L150	●	●			●		●						
2.0	2.0	8GR/L200	●	●			●	●	●						
2.5	2.0	8GR/L250	●				●	●	●	●					
3.0	2.0	8GR/L300	●	●			●	●	●	●					
3.5	2.0	8GR/L350	●	●			●		●						
1.0	1.5	9GR/L100									6.35	12.95	4.66	2.86	7.74
1.5	2.0	9GR/L150	●	●			●		●	●					
2.0	3.0	9GR/L200	●	●			●	●	●	●					
2.5	3.0	9GR/L250	●	●			●		●	●					
3.0	3.0	9GR/L300	●	●			●	●	●	●					
3.5	3.0	9GR/L350	●	●			●		●	●					
1.0	1.5	15GR/L100									9.2	20.80	5.1	4.8	10.8
1.5	2.0	15GR/L150													
2.0	3.0	15GR/L200	●				●		●						
2.5	3.0	15GR/L250	●				●		●						
3.0	3.0	15GR/L300	●				●		●	○					
3.5	3.0	15GR/L350	●	○			●		●						
4.0	4.0	15GR/L400	●				●		●						
4.5	4.0	15GR/L450	●	○			●	○	●						
5.0	5.0	15GR/L500	●	○			●		●						

● Inserts for lock-ring grooves

Grooving width W±0.025 (mm)	Grooving depth (mm)	Cat. No.	Stocked grades: Cermet NS530 R	Cermet NS530 L			Uncoated TH10 R	Uncoated TH10 L	Uncoated UX30 R	Uncoated UX30 L	Dimensions (mm) A	T	øD	L
1.15	1.5	6GR/L115									4.76	2.34	2.3	5.56
1.35	1.5	6GR/L135												
1.15	1.5	7GR/L115									5.56	3.08	2.58	5.56
1.35	1.5	7GR/L135												
1.75	1.5	7GR/L175												
1.35	1.5	8GR/L135									5.56	3.87	2.58	6.15
1.75	1.5	8GR/L175												
1.95	2.0	8GR/L195												
1.75	1.5	9GR/L175									6.35	4.66	2.86	7.74
1.95	2.0	9GR/L195												
2.20	2.0	9GR/L220												
2.70	2.5	9GR/L270												
1.75	1.5	15GR/L175									9.2	5.1	4.8	10.8
1.95	2.0	15GR/L195												
2.20	2.0	15GR/L220												
2.70	2.5	15GR/L270												
3.20	3.0	15GR/L320												
4.20	3.5	15GR/L420												

Notes:
- ● Inserts for lock-ring grooves are made to order.
- ● When using a ground-in chipbreaker insert, right hand (R) holder use right hand inserts, and left hand toolholder use left hand inserts.

● Standard cutting conditions

Work materials	Cutting speed Vc (m/min)	Feed f (mm/rev)
Medium carbon steels	40 ~ 150	0.05 ~ 0.15
Cast irons · Light alloys	60 ~ 200	0.05 ~ 0.15

Note:
- ● Cutting conditions shown left are for guideline only.
- ● When grooving around the minimum bore diameter or with long reach conditions, reduce the conditions shown left by approximately 50%.
- ● To help chip evacuation, use water-soluble cutting fluid. The fluid should be applied sufficiently to the cutting point.
  When using without cutting fluid, reduce both the cutting speeds and feeds shown left by 50% at least.

CGX-type Toolholder

Internal grooving

CGX R/L

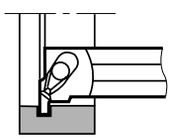

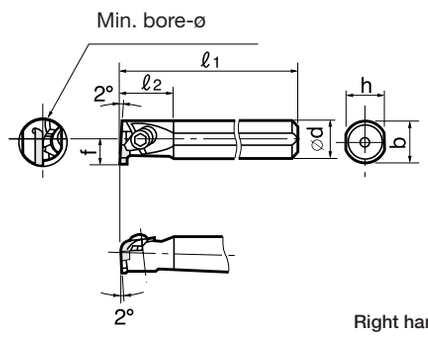

Right hand (R) shown

Max. grooving width (mm)	Min. bore dia. ØD (mm)	Max. grooving depth (mm)	Shank material	Cat. No.	Stock R	Stock L	Inserts	Dimensions (mm) ød	f	ℓ1	ℓ2	h	b	Parts Clamping set	Wrench
3.0	20	3.0	Steel	CGXR/L0016	●	●	GIR/L52□□□	16	11.3	150	24	15	15.5	CSW-0	P-2.5T
	24			CGXR/L0020	●	●		20	13.3	180	30	18	19		
5.0	32	5.3		CGXR/L0025	●	●	GIR/L63□□□	25	18	200	38	23	24	CSW-2	P-4
	40			CGXR/L0032	●	●		32	23	250	48	30	31		
	48			CGXR/L0040	●	●		40	27	300	60	37	38.5		
3.0	20	3.0	Carbide	CGXR/L16SC	●	●	GIR/L52□□□	16	11.3	200	24	15	–	CSW-0	P-2.5T

■ Inserts

GIR/L

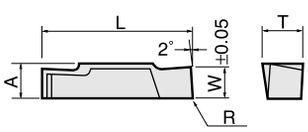

Right hand (R) shown

Grooving width W±0.05 (mm)	Grooving depth (mm)	Cat. No.	Stocked grades Cermet NS530 R	Cermet NS530 L			Uncoated TH10 R	Uncoated TH10 L	Dimensions (mm) A	T	L	R
1.0	1.5	GIR/L5210-02 GIR/L5210	●	●			●	●	3.5	4.5	1.5	0.2 0
1.5	2.3	GIR/L5215-02 GIR/L5215	●	●			●	●				0.2 0
2.0	3.0	GIR/L5220-02 GIR/L5220	●	●			●	●				0.2 0
2.5	3.0	GIR/L5225-02 GIR/L5225	●	●			●	●				0.2 0
3.0	3.0	GIR/L5230-02 GIR/L5230	●	●			●	●				0.2 0
1.0	1.5	GIR/L6310-02 GIR/L6310	●	●			●	●	5.5	6.5	24	0.2 0
1.5	2.3	GIR/L6315-02 GIR/L6315	●	●			●	●				0.2 0
2.0	3.0	GIR/L6320-02 GIR/L6320	●	●			●	●				0.2 0
2.5	3.8	GIR/L6325-02 GIR/L6325	●	●			●	●				0.2 0
3.0	4.5	GIR/L6330-02 GIR/L6330	●	●			●	●				0.2 0
3.5	5.3	GIR/L6335-02 GIR/L6335	●	●			●	●				0.2 0
4.0	5.3	GIR/L6340-02 GIR/L6340	●	●			●	●				0.2 0
4.5	5.3	GIR/L6345-02 GIR/L6345	●	●			●	●				0.2 0
5.0	5.3	GIR/L6350-02 GIR/L6350	●	●			●	●				0.2 0

■ Standard cutting conditions (External & internal grooving)

Work materials	Grades	Cutting speed Vc (m/min)	Feed f (mm/rev) W < 2 mm	W = 2 ~ 4 mm	W > 4 mm
Carbon steels	NS530	80 ~ 150	0.05 ~ 0.1	0.08 ~ 0.15	0.08 ~ 0.2
Cast irons · Light alloys	TH10	60 ~ 150	0.05 ~ 0.1	0.08 ~ 0.15	0.08 ~ 0.2

CGW-type Toolholder "Flex-Tool"

External grooving CGWS R/L

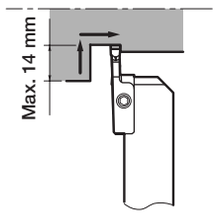

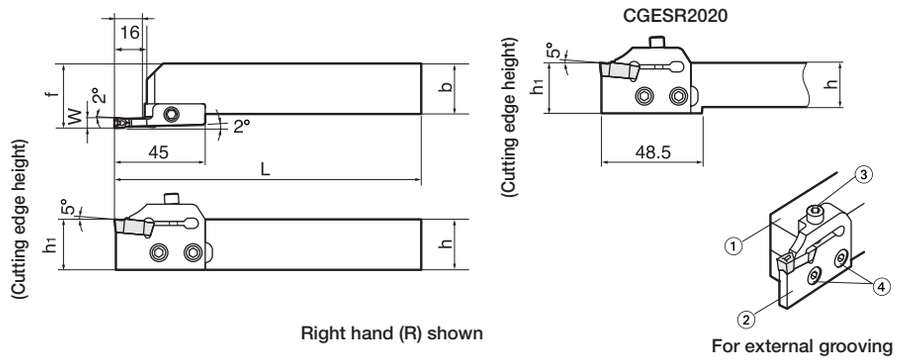

Grooving width (mm)	Grooving depth (mm)	Shank and blade ass'y Cat. No.	Stock R	Stock L	Inserts	Dimensions (mm) h1	b	h	L	f	Parts ① Shank	② Blade	Clamping screw ③ for Insert	④ for Blade	Wrench
3	10	CGWSR/L2020-FLR/L3GP	●	●	FLEX30R/L	20	20	20	152	27	CGWSR/L2020	FLR/L3GP	CHHM5-18	CSHB-6	P-4
4	12	CGWSR/L2020-FLR/L4GP	●	●	FLEX40R/L							FLR/L4GP			
5	14	CGWSR/L2020-FLR/L5GP	●	●	FLEX50R/L							FLR/L5GP			
3	10	CGWSR/L2525-FLR/L3GP	●	●	FLEX30R/L	25	25	25	152	27	CGWSR/L2525	FLR/L3GP			
4	12	CGWSR/L2525-FLR/L4GP	●	●	FLEX40R/L							FLR/L4GP			
5	14	CGWSR/L2525-FLR/L5GP	●	●	FLEX50R/L							FLR/L5GP			

Internal grooving CGWT R/L

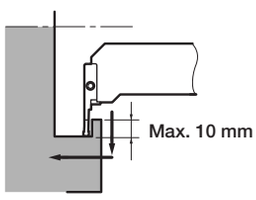

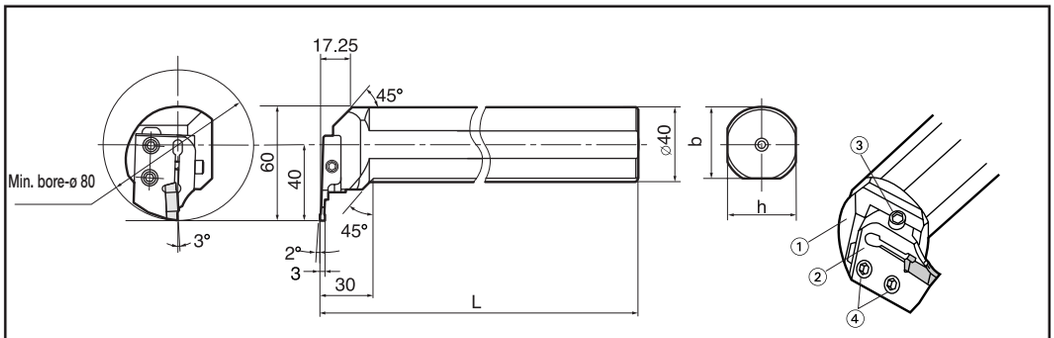

Grooving width (mm)	Min. bore dia. (mm)	Max. grooving depth (mm)	Shank and blade ass'y Cat. No.	Stock R	Stock L	Insert	Dimensions (mm) h1	b	h	L	f	Parts ① Shank	② Blade	Clamping screw ③ for Insert	④ for Blade	Wrench
3	ø80	10	CGWTR/L0040-FLL/R3NP	●	●	FLEX30L/R	–	37.5	37	180	–	CGWTR/L0040	FLL/R3NP	CHHM5-18	CSHB-6	P-4

Face grooving CGWS R/L

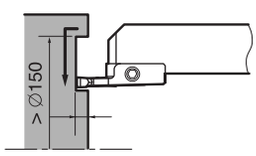

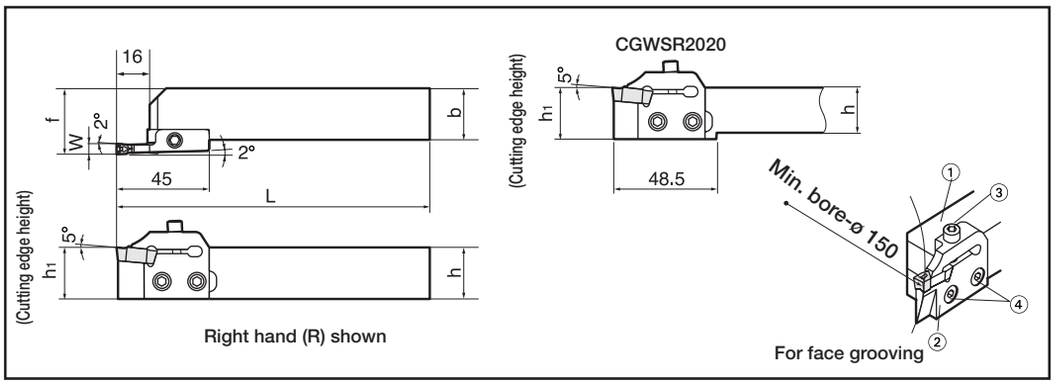

Grooving width (mm)	Min. bore dia. (mm)	Max. grooving depth (mm)	Shank and blade ass'y Cat. No.	Stock R	Stock L	Insert	Dimensions (mm) h1	b	h	L	f	Parts ① Shank	② Blade	Clamping screw ③ for Insert	④ for Blade	Wrench
5	ø150	6	CGWSR/L2020-FLR/L5TP	●	●	FLEX50R/L	20	20	20	152	27	CGWSR/L2020	FLR/L5TP	CHHM5-18	CSHB-6	P-4
			CGWSR/L2525-FLR/L5TP	●	●	FLEX50R/L	25	25	25	152	32	CGWSR/L2525				

■ Inserts

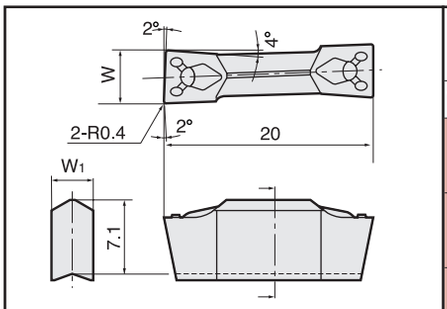

Right hand (R) shown

Dimensions (mm)				Insert Cat. No.	Stocked grades		
					Coated CVD	Cermet	Uncoated
W±0.05	R	W1	Hand		T9025	NS530	UX30
3	0.4	2.15	R	FLEX30R	●	●	
			L	FLEX30L	●	●	
4		3.10	R	FLEX40R	●	●	
			L	FLEX40L	●	●	
5		4.00	R	FLEX50R	●	●	○
			L	FLEX50L	●	●	○

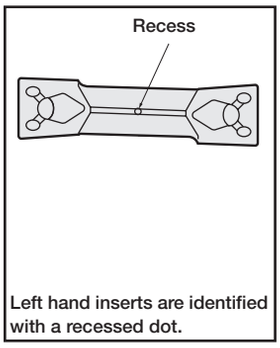

Left hand inserts are identified with a recessed dot.

Notes: ● Final letter of Cat. Nos.: R = Right hand, L = Left hand
● Right hand blades use right hand insert.
Left hand blades use left hand insert.

■ Standard cutting conditions

Insert grades	Inserts	Grooving		Lateral feed machining			Coolant
		Cutting speed Vc (m/min)	Feed f (mm/rev)	Cutting speed Vc (m/min)	Feed f (mm/rev)	Cutting depth ap (mm)	
T9025	FLEX30R/L	80 ~ 150	0.05 ~ 0.2	80 ~ 150	0.1 ~ 0.2	0.8 ~ 1.5	Necessary
	FLEX40R/L	80 ~ 150	0.05 ~ 0.25	80 ~ 150	0.1 ~ 0.2	0.8 ~ 2.0	
	FLEX50R/L	80 ~ 150	0.05 ~ 0.3	80 ~ 150	0.1 ~ 0.3	1.0 ~ 2.5	
NS530	FLEX30R/L	80 ~ 200	0.05 ~ 0.2	80 ~ 200	0.1 ~ 0.2	0.8 ~ 1.5	
	FLEX40R/L	80 ~ 200	0.05 ~ 0.25	80 ~ 200	0.1 ~ 0.2	0.8 ~ 2.0	
	FLEX50R/L	80 ~ 200	0.05 ~ 0.3	80 ~ 200	0.1 ~ 0.3	1.0 ~ 2.5	

Notes: ● The cutting conditions given above are based on cutting medium carbon steel (HB = 200).
● When the 20 mm - square shank tools are used, machining should be perfomed at approximately 80% of the values shown above.
● For face grooving, cutting depth and feed should be performed at approximately 70% of the values shown above.

■ Cautionary Notes

1. When facing, the operation should proceed from the OD toward the center in order to prevent tool breakage.
2. When performing OD machining, the toolpoint must be set at a right angle to the axial direction of the work.
3. When replacing an insert, the replacement should be made only after completely removing any chips or other foreign matter from the tool-clamping area on the holder by using compressed air etc.
4. Never tighten the insert-mounting screws when an insert has not been installed since doing so can deform the screws and prevent the future installation of an insert.
5. The inserts in Flex-Tools move upon the application of cutting force to form an end-cutting edge angle that suppresses chattering during OD-machining operations. For this reason, when performing OD cutting, the danger exists that the programmed dimensions for the work diameter will not be achieved if the machining conditions (cutting depth and feedrate) are set too high. If this is found to be the case, it is necessary to perform a compensation in the program by an amount that is equal to the amount of A-A' (the amount of OD compensation) that is shown in the drawing on the right (refer to the values for the amount of OD compensation that are given in the graph below the drawing.)

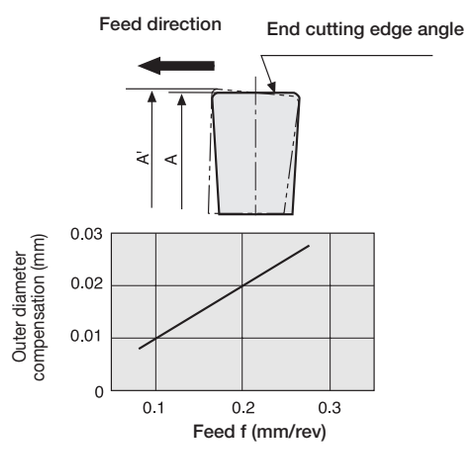

Guidelines for compensating outer diameter